METERING

DRAWING NUMBER	SHT.	DRAWING TITLE	DWG REV.	BOM REV.
A-24-00	1 – 1	GENERAL INFORMATION	C	-
A-24-01	1 – 4	POLE MOUNTED 25 kV PRIMARY METER INSTALLATION	C / B	B / B
A-24-02	1 – 4	PLATFORM MOUNTED 25 kV PRIMARY METER INSTALLATION	C / B	C / B
A-24-03	1 – 2	4160 V 3Ø - 4 WIRE OR 2400 V 3Ø - 3 WIRE PRIMARY METERING	A	A
A-24-04	1 – 2	METERING FOR 3Ø - 3 WIRE 1080 V 225 kVA AND 450 kVA	0	0
A-24-05	1 – 2	METERING FOR 3Ø - 3 WIRE 1080 V 100 kVA AND 150kVA	0	0
A-24-06	1 – 2	METERING FOR OILFIELD	A	A
A-24-07	1 – 2	OILFIELD SERVICE 347/600 V 3Ø - 4 WIRE & 277/480 V 3Ø 4 WIRE UP TO 200 AMPS	G	G
A-24-08	1 – 3	OILFIELD SERVICE 3Ø 480 V 3 WIRE	D / D	D
A-24-09	1 – 3	OILFIELD SERVICE FOR 1Ø 120/240 V AND 240/480 V UNDERGROUND	H / E	H
A-24-10	1 – 2	1Ø FARM CABINET UP TO 200 AMPS COMPLETE WITH STANDBY	H	G
A-24-11	1 – 2	1Ø FARM CABINET UP TO 200 AMPS	J	I
A-24-12	1 – 2	1Ø FARM CABINET UP TO 100 AMPS	C	C
A-24-15	1 – 4	25kV POLE-MOUNTED 3Ø - 4W WYE PRIMARY METER INSTALLATION	0 / 0	0 / 0
A-24-16	1 – 4	25kV POLE MOUNTED 3Ø - 3W DELTA PRIMARY METER INSTALLATION	0 / 0	0 / 0
A-24-17	1 – 2	F-200 METER BOX MODIFICATION FOR CUSTOMER NEUTRAL GROUNDING RESISTOR	0	0

AUTO ✱ DRAFT

METERING

1. ALL METERS, CURRENT AND POTENTIAL TRANSFORMERS, PRIMARY METERING UNITS AND HOUSINGS ARE TO BE ORDERED THROUGH THE METER REPAIR SHOP.

2. FOR WIRING THE METERS, REFER TO THE REVENUE METERING MANUAL.

3. THE DRAWINGS IN THIS SECTION ONLY COVER THE VOLTAGE AND LOAD COMBINATIONS FOR WHICH THE CORPORATION SUPPLIES METERING MATERIALS. ALL OTHERS ARE THE RESPONSIBILITY OF THE CUSTOMER. REFER TO THE SERVICE POLICY SECTIONS OF THE ELECTRIC SERVICE GUIDE (OR BUSINESS POLICY).

4. REFER TO SECTION A–33–XX FOR GROUNDING DETAILS.

5. LISTED BELOW IS A SUMMARY OF THE GENERAL APPLICATION OF THE DRAWINGS IN THIS SECTION.

PRIMARY	OILFIELD & FARM IRRIGATION	1Ø (FARM)
A–24–15	A–24–07	A–24–10
A–24–16	A–24–09	A–24–11

6. ALL METERS ARE TO BE LOCATED A MINIMUM OF 90° AROUND THE POLE AWAY FROM THE CUTOUT.

BILL OF MATERIAL

ITEM NO.	CODE NO.	QUANTITY	DESCRIPTION
1	1-08-38	4	BOLT – CARRIAGE – 3/8” x 4 ½”
2	1-09-18	1	BOLT – DOUBLE ARMING – 5/8” x 18”
3	1-09-20	6	BOLT – DOUBLE ARMING – 5/8” x 20”
4	1-12-08	4	BOLT MACHINE – ½” x 8”
5	1-13-12	2	BOLT MACHINE – 5/8 x 12”
6	1-13-14	1	BOLT MACHINE – 5/8” x 14”
7	1-19-32	4	BRACE – X-ARM – 32”
8	1-21-31	2	PLATE – ADAPTER
9	1-29-10	5	CROSSARM – 10’ x 5” x 4”
10	1-53-13	2	PIN – FEMALE
11	1-78-12	2	SCREW – LAG – ½” x 4 ½”
12	1-85-01	1 lb	STAPLE – FENCE
13	1-85-02	20	STAPLE – MOULDING
14	1-93-25	8	WASHER – LOCK DOUBLE COIL – 3/8”
15	1-93-27	9	WASHER – LOCK DOUBLE COIL – 5/8”
16	1-93-42	25	WASHER – SQUARE – 2 ¼” x 2 ¼” x 13/16” HOLE
17	2-XX-XX	6	CLAMP – DEADEND
18	2-20-23	2	INSULATOR – PIN TYPE
19	2-27-00	30 FT	MOULDING – WOOD
20	2-29-25	3	DEADEND – POLYMER TONGUE-TO-TONGUE
21	2-65-83	6	CONNECTOR – COMPRESSION HYLUG #2
22	2-71-77	3	OCR – BYPASS
23	2-83-02	35 m	WIRE – CU #2/7 STR
24	2-83-04	12 m	WIRE – CU #4/7 STR

SPC/AUTODRAFT

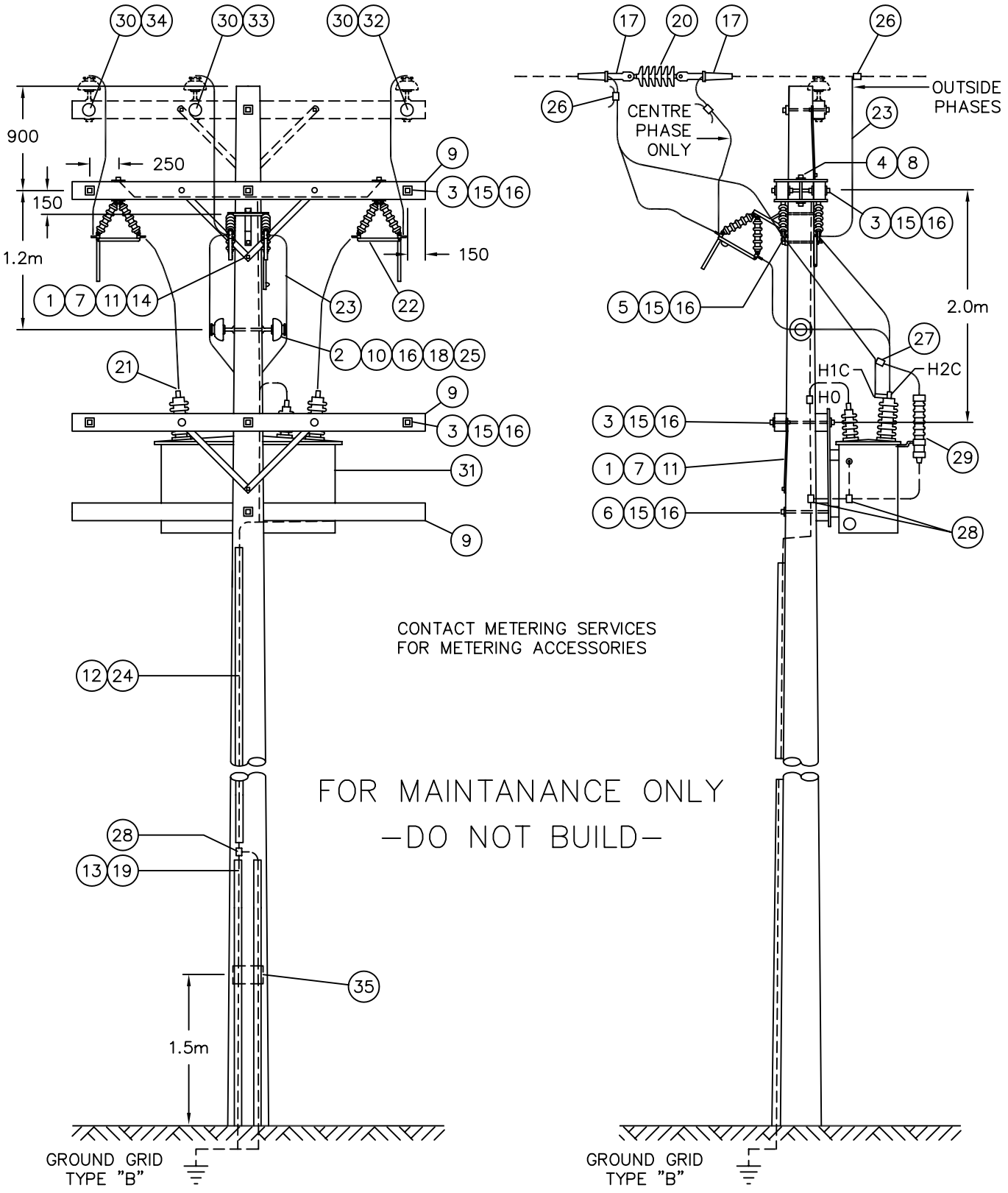

NOTE: PHASE MARKERS ON SAME SIDE OF CROSSARM AS METERING UNIT.

SCALE: N.T.S. ALL DIMENSIONS ARE IN MILLIMETRES UNLESS OTHERWISE INDICATED

SaskPower – DISTRIBUTION STANDARDS

DRN. DC	DESIGN CHK.	SAFETY APP.	APPROVAL	POLE MOUNTED 25 kV PRIMARY METER INSTALLATION
CHKD.				
DATE	DATE	DATE	DATE	
DATE OF ISSUE		DRAWING NO. A-24-01	SHEET 2 of 4	REV. C

BILL OF MATERIAL

ITEM NO.	CODE NO.	QUANTITY	DESCRIPTION
25	**2-97-50**	**2**	**UNI-TIE**
26	**5-09-XX**	**6**	**CONNECTOR – COMPRESSION**
27	**5-12-01**	**7**	**CONNECTOR – COMPRESSION #2 TO #2**
28	**5-12-06**	**4**	**CONNECTOR – COMPRESSION #4 TO #4**
29	**6-02-18**	**3**	**ARRESTORS – 18 Kv COMPLETE WITH BRACKETS**
30	**7-69-62**	**3**	**SCREW – WOOD #10 – 1 ½"**
31	**U5-4X-XX**	**1**	**PRIMARY – METER UNIT – 25 Kv**
32	**05-116-362**	**1**	**PHASE MARKER DISC – BLUE**
33	**05-116-366**	**1**	**PHASE MARKER DISC – YELLOW**
34	**05-116-368**	**1**	**PHASE MARKER DISC – RED**
35	**05-640-000**	**1**	**DANGER – SIGN**

NOTE:

1. **ITEM NO. 17, DEADEND CLAMP CONNECTOR, REFER TO SECTION A-36.**

SPC/AUTODRAFT

TOP VIEW

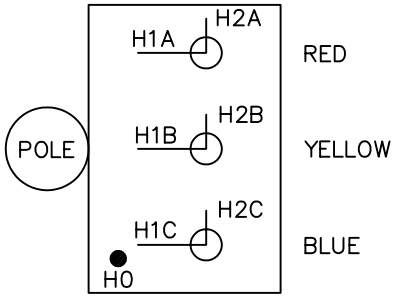

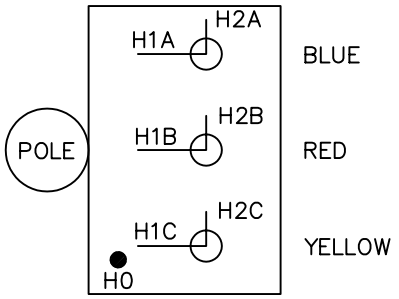

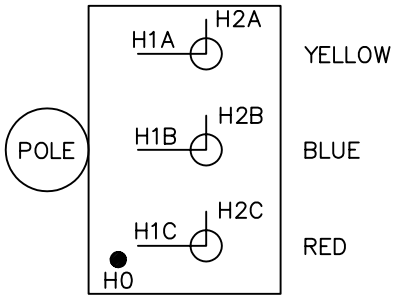

NOTE:
THESE THREE LINE ILLUSTRATIONS WILL PROVIDE A R–Y–B POSITIVE PHASE SEQUENCE.

SaskPower – DISTRIBUTION STANDARDS				
DRN. DC CHKD. FTK	DESIGN CHK.	SAFETY APP.	APPROVAL	POLE MOUNTED 25 kV PRIMARY METER INSTALLATION
DATE 86–11–17	DATE	DATE	DATE	
DATE OF ISSUE		DRAWING NO. A–24–01	SHEET 4 of 4	REV. B

BILL OF MATERIAL

ITEM NO.	CODE NO.	QUANTITY	DESCRIPTION
1	1-08-38	2	BOLT-CARRIAGE - 3/8" x 4 1/2"
2	1-09-18	1	BOLT-DOUBLE ARMING - 5/8" x 18"
3	1-09-20	3	BOLT-DOUBLE ARMING - 5/8" x 20"
4	1-12-08	4	BOLT-MACHINE - 1/2" x 8"
5	1-13-12	2	BOLT-MACHINE - 5/8" x 12"
7	1-14-14	4	BOLT-MACHINE - 3/4" x 14"
8	1-19-32	2	BRACE-X-ARM - 32"
9	1-21-31	2	PLATE-ADAPTER
10	1-29-10	2	CROSSARM - 10' x 5" x 4"
11	1-53-13	2	PIN-FEMALE
12	1-78-12	1	SCREW-LAG - 1/2" x 4 1/2"
13	1-85-01	1 lb	STAPLE-FENCE
14	1-85-02	20	STAPLE-WOOD MOULDING
15	1-93-25	8	WASHER-LOCK DOUBLE COIL - 3/8"
16	1-93-27	4	WASHER-LOCK DOUBLE COIL - 5/8"
17	1-93-28	4	WASHER-LOCK DOUBLE COIL - 3/4"
18	1-93-43	21	WASHER-SQUARE - 2 ¼" x 2 ¼" x 13/16" HOLE
19	2-XX-XX	6	CLAMP-DEADEND
20	2-20-23	2	INSULATOR PIN TYPE
21	2-27-00	30 ft	MOULDING-WOOD
22	2-29-25	3	DEADEND-POLYMER TONGUE-TO-TONGUE
23	2-65-83	6	CONNECTOR-COMPRESSION HYLUG #2
24	2-71-77	3	OCR-BYPASS
25	2-83-02	35 m	WIRE-CU #2/7 STR
26	2-83-04	12 m	WIRE-CU #4/7 STR

SPC/AUTODRAFT

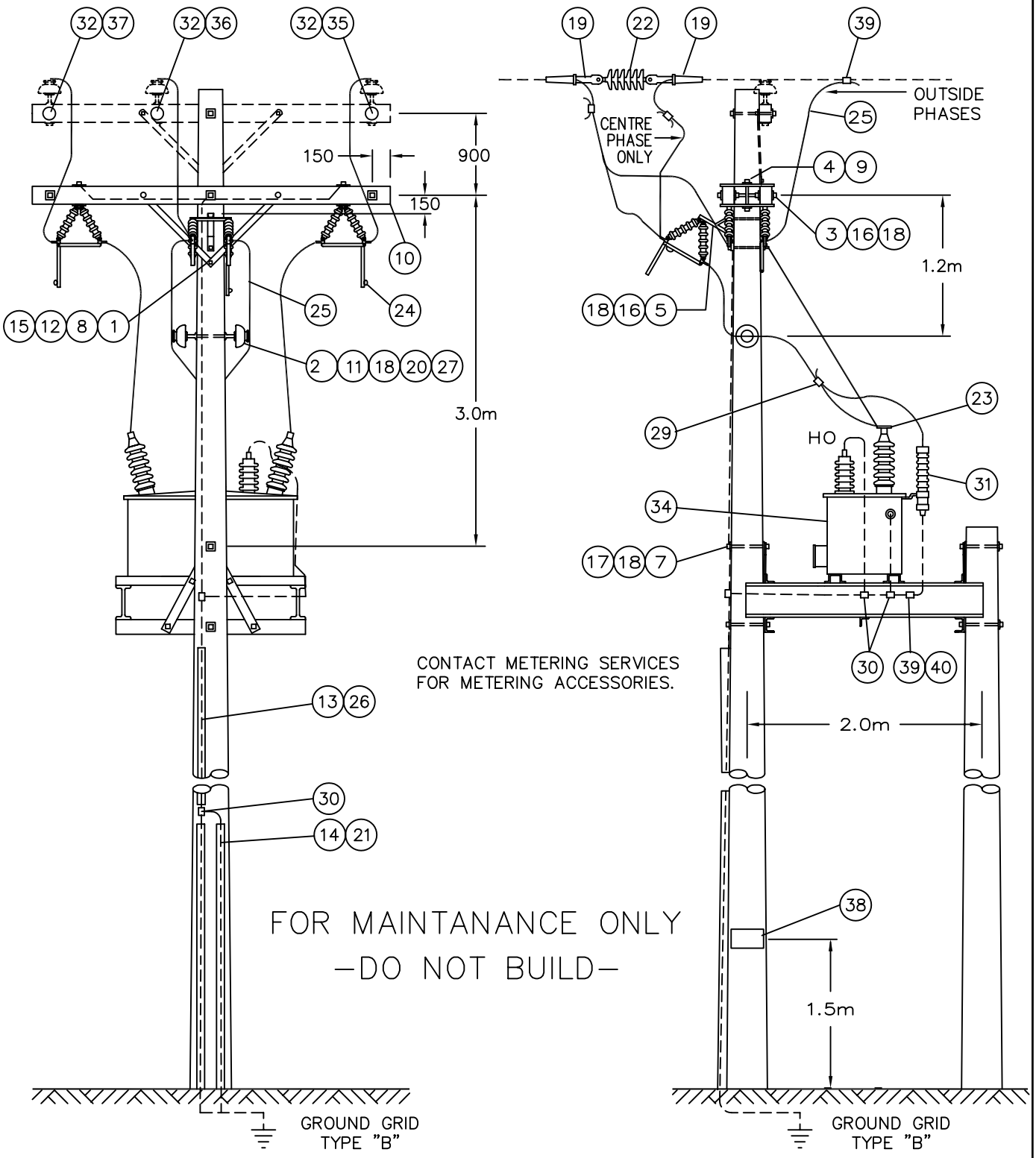

NOTE:

1. USE 10.7m CLASS 4 POLE CUT DOWN AS REQUIRED.
2. PHASE MARKERS ON SAME SIDE OF CROSSARM AS METERING UNIT.

SCALE: N.T.S. ALL DIMENSIONS ARE IN MILLIMETRES UNLESS OTHERWISE INDICATED

SaskPower – DISTRIBUTION STANDARDS

DRN. DC	DESIGN CHK.	SAFETY APP.	APPROVAL	PLATFORM MOUNTED 25 kV PRIMARY METER INSTALLATION
CHKD.				
DATE	DATE	DATE	DATE	
DATE OF ISSUE		DRAWING NO. A-24-02	SHEET 2 of 4	REV. C

BILL OF MATERIAL

ITEM NO.	CODE NO.	QUANTITY	DESCRIPTION
27	2-97-50	2	UNI-TIE
28	5-09-XX	6	CONNECTOR – COMPRESSION
29	5-12-01	3	CONNECTOR – COMPRESSION #2 TO #2
30	5-12-06	4	CONNECTOR – COMPRESSION #2 TO #4
31	6-02-18	3	ARRESTORS – 18 Kv COMPLETE WITH BRACKETS
32	7-69-62	3	SCREW – WOOD #10 – 1 ½”
33	8-30-46	1	PLATFORM – ALUMINUM
34	U5-4X-XX	1	PRIMARY – METER UNIT – 25 Kv
35	05-116-362	1	PHASE MARKER DISC – BLUE
36	05-116-366	1	PHASE MARKER DISC – YELLOW
37	05-116-368	1	PHASE MARKER DISC – RED
38	05-640-000	1	DANGER – SIGN
39	Purchase Locally	4	½” 1 – HOLE CONDUIT STRAP
40	Purchase Locally	4	SCREWS – SELF TAPPING – 8 x ¾”

NOTE:

1. **ITEM NO. 19, REFER TO SECTION A-36 FOR TYPE.**

*Sask**Power*** - DISTRIBUTION STANDARDS

DRN.	DESIGN CHK.	APPROVAL	PLATFORM MOUNTED – 25 KV PRIMARY METER INSTALLATION
CHKD.			
DATE	DATE	DATE	

DATE OF ISSUE 90-04-02	DRAWING NO: A-24-02	SHEET 3 of 4	REV. B

SPC/AUTODRAFT

TOP VIEW

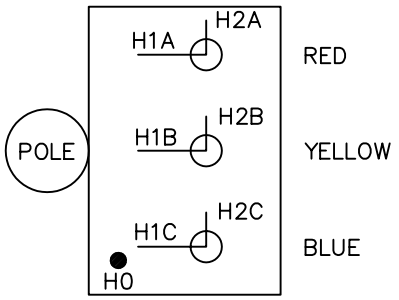

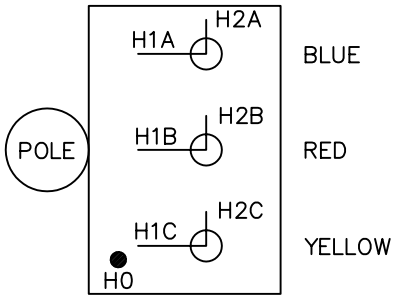

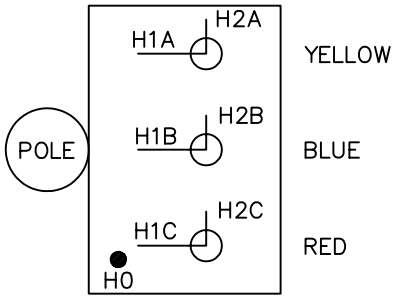

NOTE:
THESE THREE LINE ILLUSTRATIONS WILL PROVIDE A R–Y–B POSITIVE PHASE SEQUENCE.

SaskPower – DISTRIBUTION STANDARDS				
DRN. DC CHKD. FTK DATE 86-11-17	DESIGN CHK. DATE	SAFETY APP. DATE	APPROVAL DATE	PLATFORM MOUNTED 25 kV PRIMARY METER INSTALLATION
DATE OF ISSUE		DRAWING NO. A–24–02	SHEET 4 of 4	REV. B

BILL OF MATERIAL

ITEM NO.	CODE NO.	QUANTITY	DESCRIPTION
1	1-08-38	2	BOLT-CARRIAGE - 3/8" x 4 1/2"
2	1-13-14	1	BOLT-MACHINE - 5/8" x 14"
3	1-13-16	2	BOLT-MACHINE - 5/8" x 16"
4	1-19-32	2	BRACE-CROSSARM
5	1-29-10	1	CROSSARM - 10' x 5" x 4"
6	1-78-12	2	SCREW-LAG - 1/2" x 4 1/2"
7	1-85-01	1 LB	STAPLE-FENCE
8	1-85-02	10	STAPLE-MOULDING
9	1-93-42	5	WASHER-SQUARE - 2 1/4" x 2 1/4" x 13/16" HOLE
10	2-27-00	30 FT	MOULDING-GROUND WIRE
11	2-83-04	12 m	WIRE-CU #4 STR
12	5-09-XX	3	CONNECTOR-COMPRESSION (SIZE TO SUIT)
13	5-09-XX	1	CONNECTOR-COMPRESSION (SIZE TO SUIT)
14	5-12-06	3	CONNECTOR-COMPRESSION #4 TO #4
15	7-69-62	8	SCREW-WOOD #10 - 1 1/2"
16	84-53-XX	1	METER UNIT COMPLETE WITH C.T.'S, P.T.'S AND CABLES
17	05-640-000	1	DANGER-SIGN
18	PURCHASE LOCALLY	6 m	LIQUID TIGHT FLEX - 1 1/4"
19	PURCHASE LOCALLY	4	CONDUIT STRAPS
20	PURCHASE LOCALLY	2	LIQUID TIGHT CONNECTOR - 1 1/4"

NOTE:

1. FOR 2400 V REMOVE ITEM NUMBER 13.

*Sask**Power*** - DISTRIBUTION STANDARDS

DRN.	DESIGN CHK.	APPROVAL	4160 V 3∅ 4 WIRE OR 2400 V 3∅ 3-WIRE PRIMARY METERING
CHKD.			
DATE	DATE	DATE	

DATE OF ISSUE **87-12-01**	DRAWING NO: **A-24-03**	**SHEET 1 of 2**	REV. **A**

SPC/AUTODRAFT

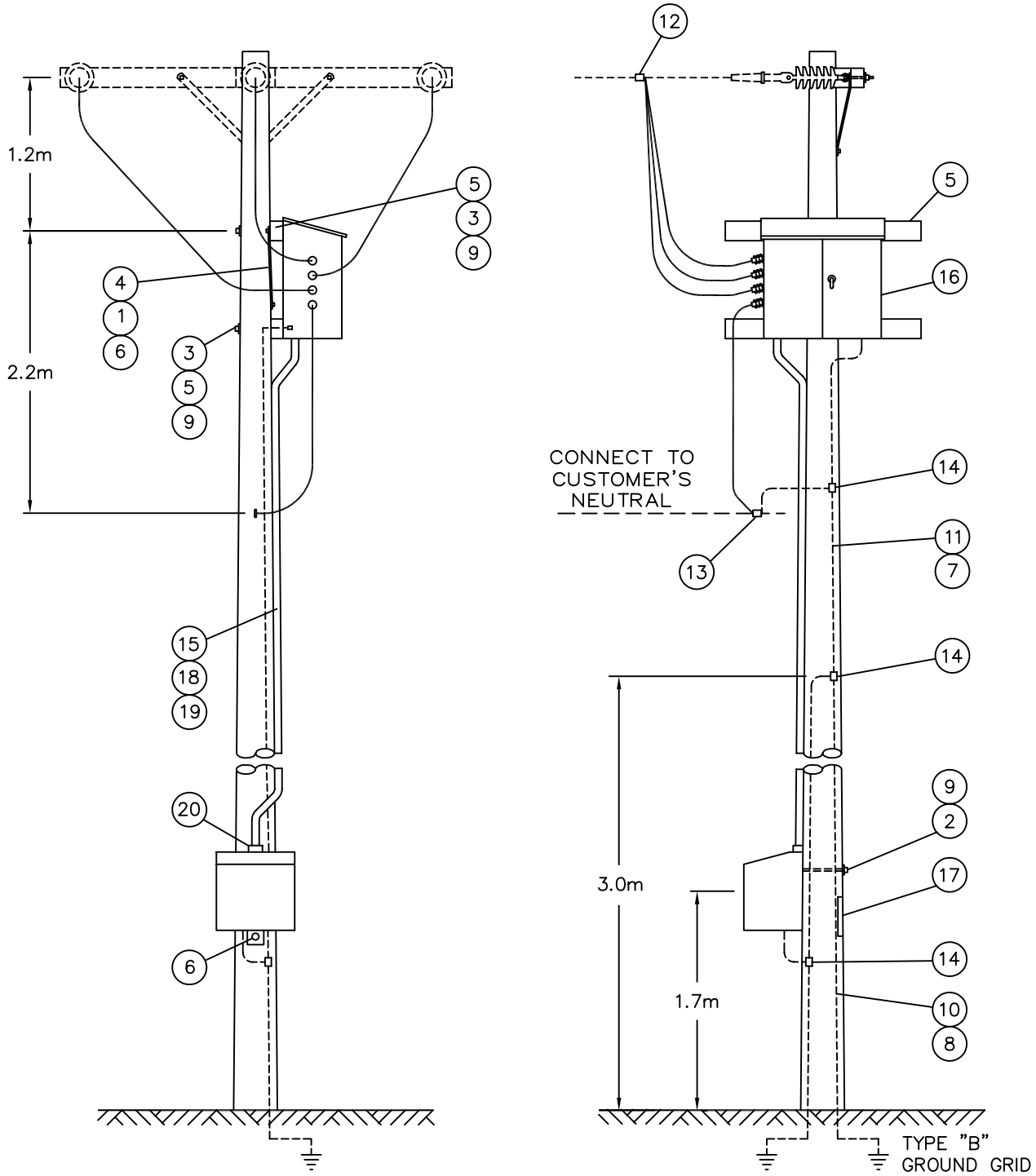

FOR MAINTENANCE ONLY
–DO NOT BUILD–

NOTE:

1. CUT CROSSARM IN HALF AND REDRILL AS NECESSARY.

SCALE: N.T.S. ALL DIMENSIONS ARE IN MILLIMETRES UNLESS OTHERWISE INDICATED

SaskPower – DISTRIBUTION STANDARDS				
DRN. DC	DESIGN CHK.	SAFETY APP.	APPROVAL	4160 V 3Ø – 4 WIRE OR 2400 V 3Ø – 3 WIRE PRIMARY METERING
CHKD. FTK				
DATE 86-11-19	DATE	DATE	DATE	
DATE OF ISSUE 87-12-01			DRAWING NO. A-24-03	SHEET 2 of 2 REV. A

BILL OF MATERIAL

ITEM NO.	CODE NO.	QUANTITY	DESCRIPTION
1	1-08-38	2	BOLT-CARRIAGE - 4 1/2" x 3/8"
2	1-13-14	1	BOLT-MACHINE - 5/8" x 14"
3	1-13-16	2	BOLT-MACHINE - 5/8" x 16"
4	1-19-32	2	BRACE-CROSSARM
5	1-29-10	1	CROSSARM - 10' x 5" x 4"
6	1-78-12	2	SCREW-LAG - 4 1/2" x 1/2"
7	1-93-42	5	WASHER-SQUARE - 2 1/4" x 2 1/4" x 13/16" HOLE
8	2-83-04	2 m	WIRE-CU #4 STR
9	5-12-06	2	CONNECTOR-COMPRESSION #4 TO #4
10	7-69-62	8	SCREW-WOOD #10 - 1 1/2"
11	84-13-XX	1	METER UNIT COMPLETE WITH C.T.'S, P.T.'S AND CABLES
12	PURCHASE LOCALLY	5 m	LIQUID TIGHT FLEX - 1 1/4"
13	PURCHASE LOCALLY	4	CONDUIT STRAPS
14	PURCHASE LOCALLY	2	CONNECTORS - 1 1/4" LIQUID TIGHT

*Sask**Power*** - DISTRIBUTION STANDARDS

DRN.	DESIGN CHK.	APPROVAL	**METERING FOR 3∅ - 3 WIRE 1080 V - 225 kV.A AND 450 kV.A**
CHKD.			
DATE	DATE	DATE	

DATE OF ISSUE **87-12-01**	DRAWING NO: **A-24-04**	**SHEET 1 of 2**	REV. **0**

SPC/AUTODRAFT

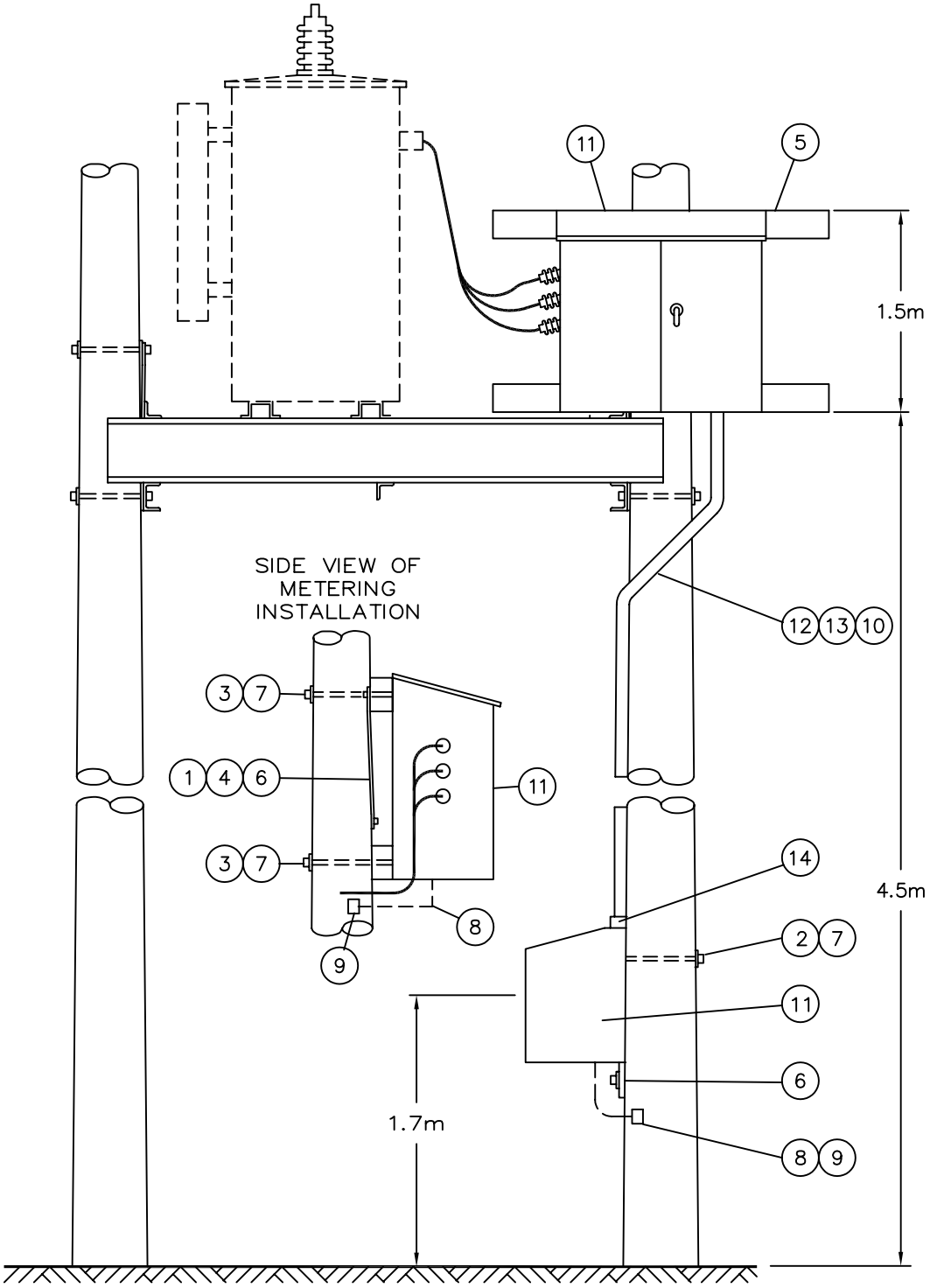

FOR MAINTENANCE ONLY
–DO NOT BUILD–

NOTE:

1. REFER TO A–08 SECTION FOR TRANSFORMER AND MATERIAL LOCATION.
2. REFER TO METERING MANUAL FOR WIRING DIAGRAM.
3. CUT CROSSARM IN HALF AND REDRILL AS REQUIRED.

SCALE: N.T.S. ALL DIMENSIONS ARE IN MILLIMETRES UNLESS OTHERWISE INDICATED

SaskPower – DISTRIBUTION STANDARDS

DRN. DC	DESIGN CHK.	SAFETY APP.	APPROVAL	METERING FOR 3Ø – 3 WIRE – 1080 V 225 KVA AND 450 KVA
CHKD. FTK				
DATE 86-11-19	DATE	DATE	DATE	
DATE OF ISSUE 87-12-01			DRAWING NO. A-24-04	SHEET 2 of 2 REV. 0

BILL OF MATERIAL

ITEM NO.	CODE NO.	QUANTITY	DESCRIPTION
1	1-08-38	2	BOLT-CARRIAGE - 4 1/2" x 3/8"
2	1-13-14	1	BOLT-MACHINE - 1/2" x 14"
3	1-13-16	2	BOLT-MACHINE - 5/8" x 16"
4	1-19-32	2	BRACE-CROSSARM
5	1-29-10	1	CROSSARM - 10' x 5" x 4"
6	1-78-12	2	SCREW-LAG - 4 1/2" x 1/2"
7	1-85-01	1 LB	STAPLE-FENCE
8	1-85-02	10	STAPLE-MOULDING
9	1-93-42	5	WASHER-SQUARE - 2 1/4" x 2 1/4" x 13/16" HOLE
10	2-27-00	30 FT	MOULDING-GROUND WIRE
11	2-83-04	12 m	WIRE-CU #4 STR
12	5-12-06	3	CONNECTOR-COMPRESSION #4 TO #4
13	7-69-62	8	SCREW-WOOD #10 - 1 1/2"
14	84-13-XX	1	METER UNIT COMPLETE WITH CABLE, C.T.'S AND P.T.'S
15	05-640-000	1	DANGER-SIGN
16	PURCHASE LOCALLY	5 m	LIQUID TIGHT FLEX - 1 1/4"
17	PURCHASE LOCALLY	4	CONDUIT STRAPS
18	PURCHASE LOCALLY	2	CONNECTORS - 1 1/4" LIQUID TIGHT

*Sask**Power*** - DISTRIBUTION STANDARDS

DRN.	DESIGN CHK.	APPROVAL	METERING FOR 3∅ - 3 WIRE 1080 V 100 kV.A AND 150 kV.A
CHKD.			
DATE	DATE	DATE	

DATE OF ISSUE **87-12-01**	DRAWING NO: **A-24-05**	**SHEET 1 of 2**	REV. **0**

SPC/AUTODRAFT

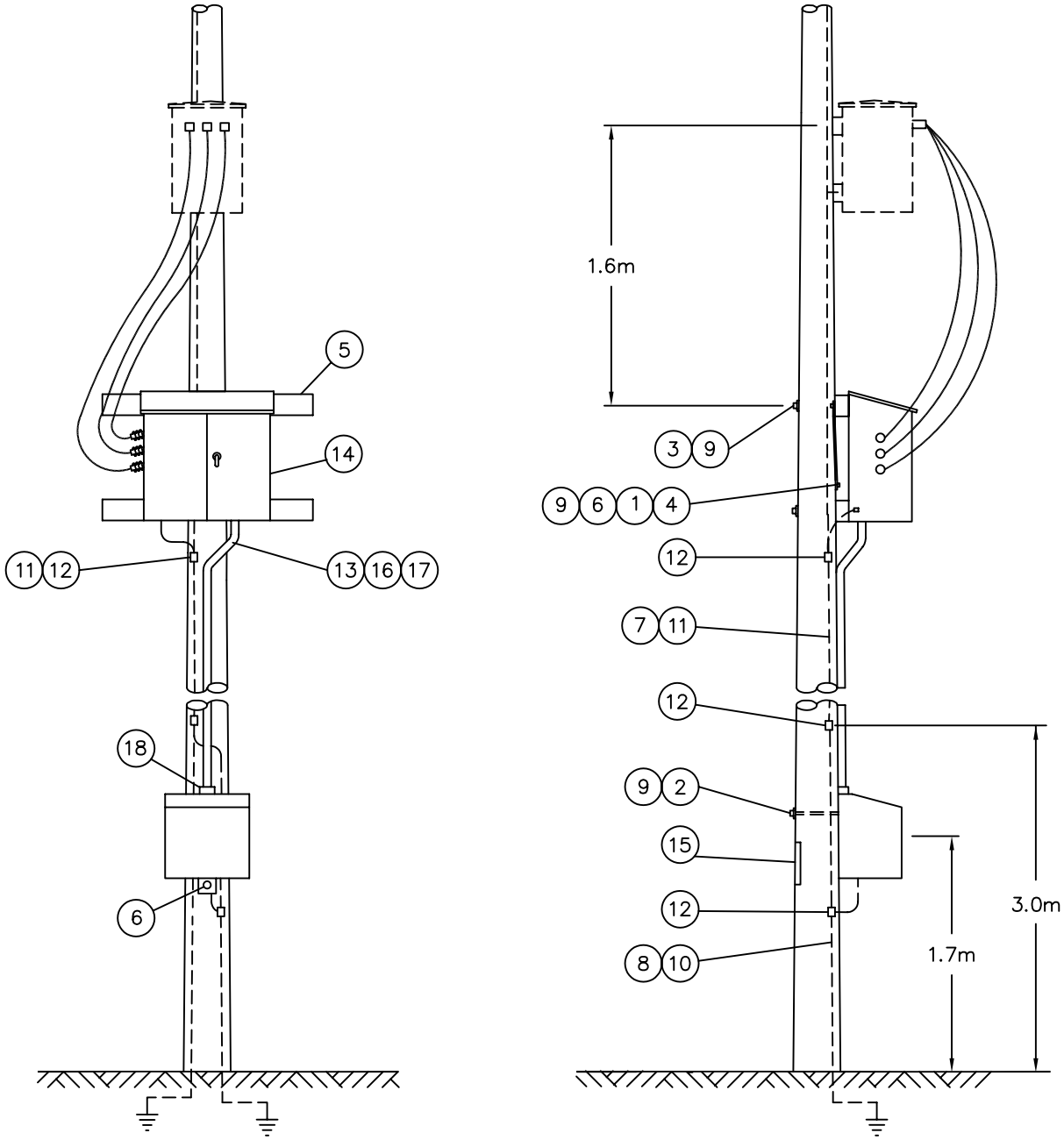

FOR MAINTENANCE ONLY
–DO NOT BUILD–

NOTE:

1. REFER TO METER MANUAL FOR WIRING DIAGRAM.
2. REFER TO A–08 SECTION FOR TRANSFORMER AND MATERIAL LOCATION.
3. CUT CROSSARM IN HALF AND REDRILL AS NECESSARY.

SCALE: N.T.S. ALL DIMENSIONS ARE IN MILLIMETRES UNLESS OTHERWISE INDICATED

SaskPower – DISTRIBUTION STANDARDS

DRN.	DESIGN CHK.	SAFETY APP.	APPROVAL	METERING FOR 3Ø – 3 WIRE 1080V 100kVA AND 150kVA
CHKD. FTK				
DATE 87–12–01	DATE	DATE	DATE	

DATE OF ISSUE 87–12–01	DRAWING NO. A–24–05	SHEET 2 of 2	REV. 0

BILL OF MATERIAL

ITEM NO.	CODE NO.	QUANTITY	DESCRIPTION
1	1-78-12	2	SCREW – LAG – ½" x 4 ½"
2	2-83-04	2m	WIRE – CU #4 STR
3	5-06-74	3	TERMINAL BLOCK COMPLETE WITH VINYL COVERS (6 OUTLETS)
4	5-12-06	2	CONNECTOR – COMPRESSION #4 TO #4
5	7-69-62	16	SCREW – WOOD #10 – 1 ½"
6	84-47-XX	1	METER UNIT COMPLETE WITH C.T.'S AND P.T.'S AND CABLE
7	Purchase Locally	6m	LIQUID TIGHT FLEX – 1 ¼"
8	Purchase Locally	4	CONDUIT STRAPS
9	Purchase Locally	1	WEATHER-HEAD – 1 ¼"
10	Purchase Locally	1	CONNECTOR WATERTIGHT – 1 ¼"

NOTE:

1. **IF "B" CABINET IS REQUIRED, REFER TO METER CODING GUIDE AND REPLACE COMBINATION SOCKET WITH BOTTOM CONNECTED METER.**

*Sask***Power** - DISTRIBUTION STANDARDS

DRN.	DESIGN CHK.	APPROVAL	**METERING FOR OILFIELD**
CHKD.			
DATE	DATE	DATE	

DATE OF ISSUE **97-12-01**	DRAWING NO: **A-24-06**	**SHEET 1 of 2**	REV. **A**

SPC/AUTODRAFT

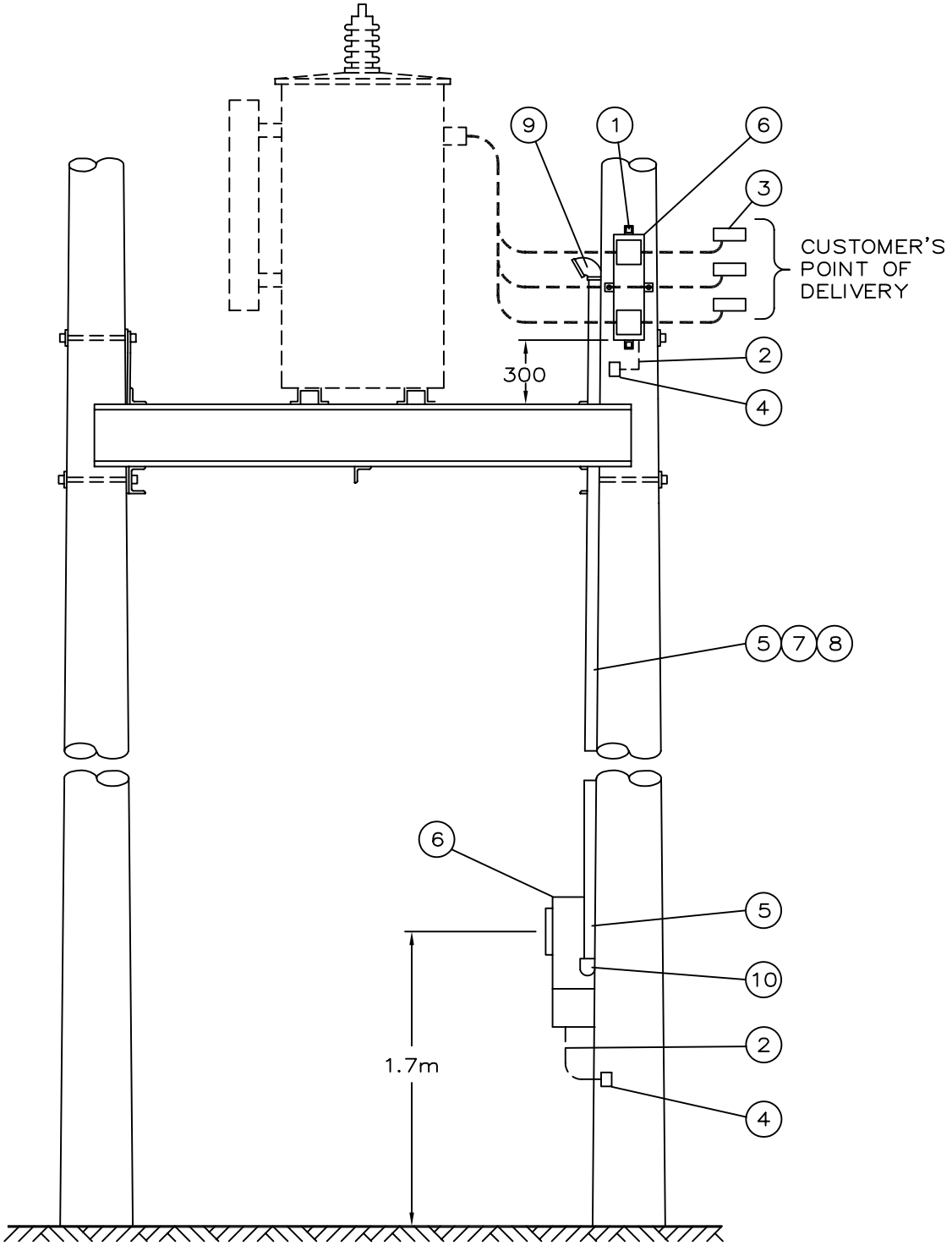

FOR MAINTENANCE ONLY
–DO NOT BUILD–

NOTE:

1. REFER TO A–08 SECTION FOR TRANSFORMER AND MATERIAL LOCATION.
2. REFER TO METERING MANUAL FOR WIRING DIAGRAM.
3. FOR 900 KVA, MOVE ITEM No. 3 TO 300mm BELOW PLATFORM.

SCALE: N.T.S. ALL DIMENSIONS ARE IN MILLIMETRES UNLESS OTHERWISE INDICATED

SaskPower – DISTRIBUTION STANDARDS				
DRN. DC	DESIGN CHK.	SAFETY APP.	APPROVAL	METERING FOR OILFIELD
CHKD. FTK				
DATE 86–11–19	DATE	DATE	DATE	
DATE OF ISSUE 87–12–01		DRAWING NO. A–24–06	SHEET 2 of 2	REV. A

BILL OF MATERIAL

ITEM NO.	CODE NO.	QUANTITY	DESCRIPTION
1	1 13 14	1	BOLT - MACHINE 5/8" x 14"
2	1 34 09	2	GUARD – CABLE – 2 1/2" X 8' PLASTIC
3	1 78 12	1	SCREW – LAG – 1/2" x 4 1/2"
4	1 93 27	1	WASHER – DOUBLE COIL – 5/8"
5	1 93 30	1	WASHER – ROUND 9/16"
6	1 93 42	1	WASHER – SQUARE – 2¼" x 2 ¼" x 13/16" HOLE
7	2 65 86	3	HYLUG – 3/0 AL
8	2 65 83	1	HYLUG – #2 (FOR CONCENTRIC NEUTRAL)
9	2 83 04	1 m	WIRE – CU #4 STR
10	2 92 81	8 m	CABLE – SERVICE 3 – 3/0 AL
11	5 04 04	--	CABINET F200 LESS METERING SOCKET (SEE NOTE 1)
11	5 04 08	1	CABINET F200 7 – JAW METERING SOCKET
12	5 08 51	1	CONNECTOR – WATERTIGHT 1 1/2" (FOR 2 92 81)
13	5 12 06	2	CONNECTOR CU – 4C4
14	5 12 08	1	CONNECTOR CU – 2C4
15	5 46 18	1	LEAD STRAP
16	7 69 64	0.32	SCREW – WOOD #14 – 2 1/2" (BOX)

NOTE:

1. **DEFAULT IS FOR 200 AMP 7 JAW – 50408. FOR 200 AMP LMS SUBSTITUTE 5 04 04.**

*Sask**Power*** - DISTRIBUTION STANDARDS

DRN.	DESIGN CHK.	APPROVAL	**OILFIELD SERVICE FOR 347/600 V 3∅ 4W AND 277-480 V 3∅ 4W UP TO 200 AMPS**
CHKD.			
DATE	DATE	DATE	

DATE OF ISSUE **2009/06/29**	DRAWING NO: **A-24-07**	**SHEET 1 OF 2**	REV. **G**

AUTO DRAFT

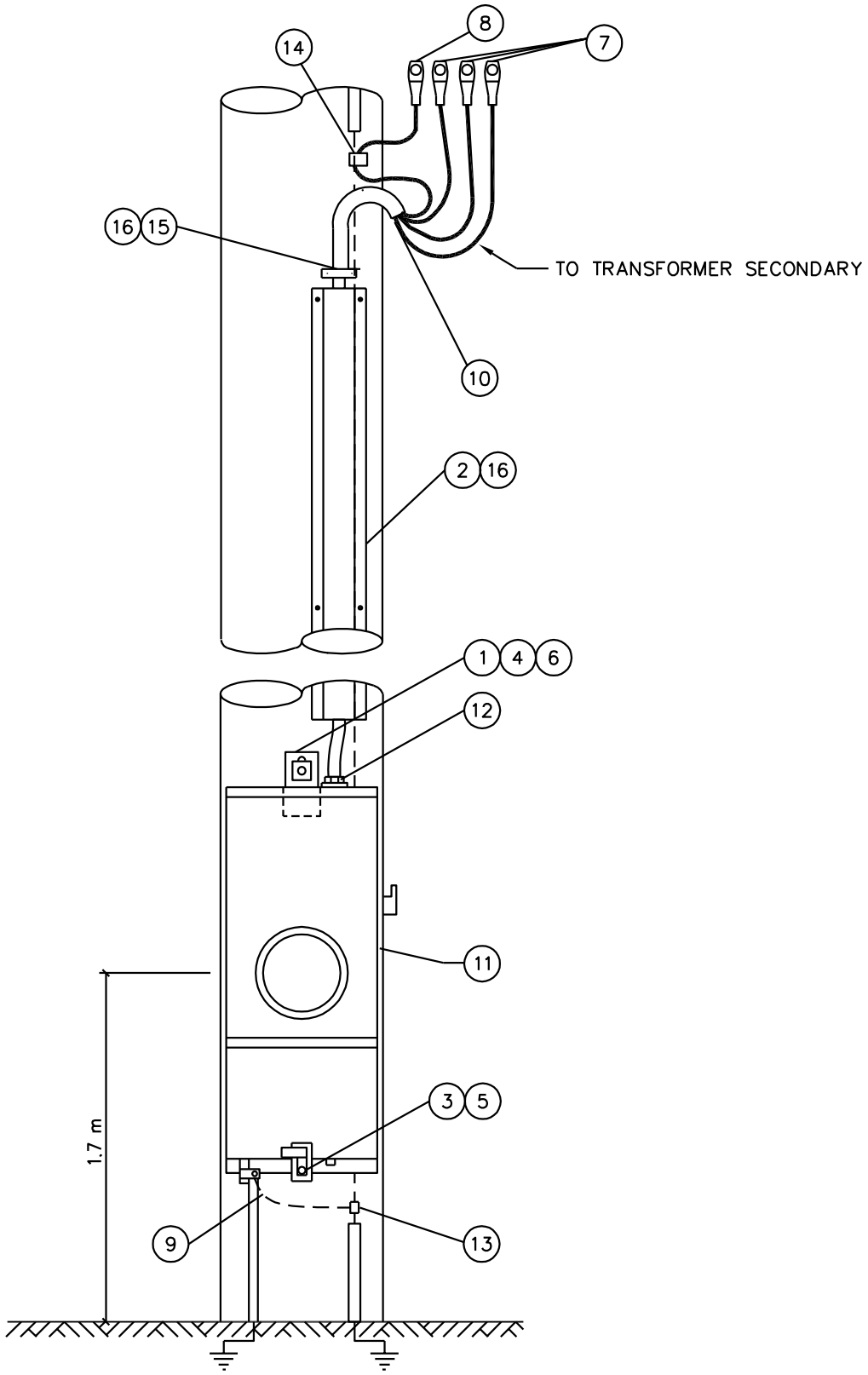

NOTE:

1. IF NOT INSTALLED ON A TRANSFORMER STRUCTURE, INSTALL A GROUND GRID TYPE 'C', CONNECT DIRECTLY TO GROUND LUG OF SWITCH CABINET, AND METER SOCKET.
2. REFER TO SECTION A-33 FOR GROUND GRID TYPE 'C'.

SCALE: N.T.S. ALL DIMENSIONS ARE IN MILLIMETRES UNLESS OTHERWISE INDICATED

SaskPower – DISTRIBUTION STANDARDS

DRN. *DK*	DESIGN CHK.	APPROVAL	OILFIELD SERVICE 347/600 V 3Ø 4W & 277/480 V 3Ø 4W UP TO 200 AMPS
CHKD.			
DATE	DATE	DATE	

DATE OF ISSUE: 2009-06-29	DRAWING NO. A-24-07	SHEET 2 of 2	REV. G

BILL OF MATERIAL

ITEM NO.	CODE NO.	QUANTITY A	QUANTITY B	DESCRIPTION
1	1 78 12	3	3	SCREW-LAG - 1/2" x 4 1/2"
2	2 83 04	1 m	1 m	WIRE-CU #4 STR
3	2 92 79	8 m	--	CABLE SERVICE 3 - 1/0 AL
3	2 92 81	--	8 m	CABLE SERVICE 3 - 3/0 AL
4	5 04 05	1	--	CABINET COMPLETE W/METERING SOCKET F100
4	5 04 03	1	--	CABINET LESS METERING SOCKET F100
4	5 04 06	--	1	CABINET COMPLETE W/METERING SOCKET F200
4	5 04 04	--	1	CABINET LESS METERING SOCKET F200
5	5 08 49	1	--	CONNECTOR-WATERTIGHT 1 1/2"
5	5 08 51	--	1	CONNECTOR-WATERTIGHT 1 1/2"
6	5 08 61	1	1	SEALING O-RING 1 1/2"
7	5 08 62	1	1	LOCKNUT - 1 1/2" STEEL
8	5 08 66	4	4	CONDUIT STRAP - 1 1/2"
9	5 12 06	2	2	CONNECTOR CU-YC4C4
10	5 12 08	1	1	CONNECTOR CU-YC2C4
11	7 69 62	0.16	0.16	SCREW-WOOD #10 - 1 1/2" (BOX)

NOTE:

1. COLUMN A IS FOR 100 AMP SERVICE
COLUMN B IS FOR 200 AMP SERVICE

*Sask**Power*** - DISTRIBUTION STANDARDS			
APPROVAL **M. ERETH**	DESIGN CHK **A. UHREN**	DRN. **ARU** CHKD. **2015-03-06**	**OILFIELD SERVICEFOR 3Ø 480V 3-WIRE**
DATE OF ISSUE 2015/08/18		DRAWING NO: **A-24-08**	**SHEET 1 OF 3** REV. **D**

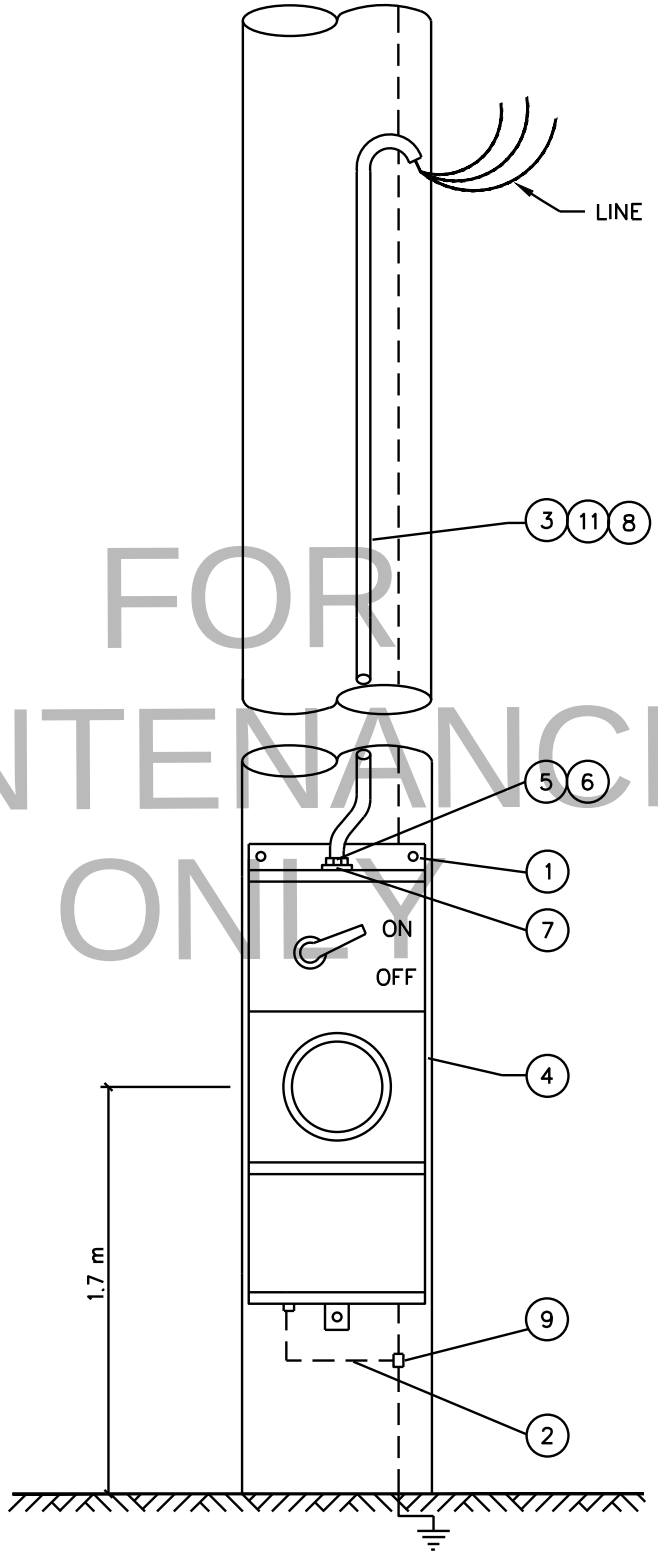

FOR MAINTENANCE ONLY

NOTE:

1. IF THERE IS NO GROUND RISER ON THE STRUCTURE, INSTALL A GROUND GRID TYPE 'A'. CONNECT DIRECTLY TO GROUND LUG OF CABINET.
2. REFER TO SECTION A–33 FOR GROUND GRID TYPE 'A'.

SCALE: N.T.S. ALL DIMENSIONS ARE IN MILLIMETRES UNLESS OTHERWISE INDICATED

SaskPower – DISTRIBUTION STANDARDS			
APPROVAL M.ERETH	DESIGN CHK. A.UHREN	DRN. A.GATZKE CHKD.	OILFIELD SERVICE 3ø 480 V. 3 WIRE
		2015–04–22	
DATE OF ISSUE 2015/08/18		DRAWING NO. A–24–08	SHEET 2 of 3 REV. D

PREWIRED FOR 480 VOLT 3 Ø – 3 WIRE SERVICE

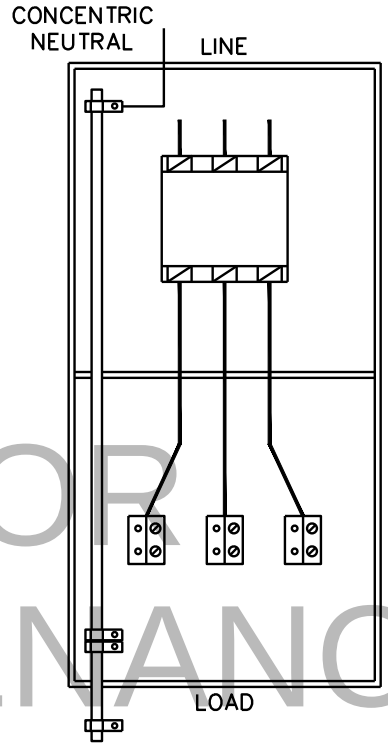

F100 – F200 (LMS)

FOR MAINTENANCE ONLY

PREWIRED FOR:
480 VOLT 3 Ø – 3 WIRE SERVICE

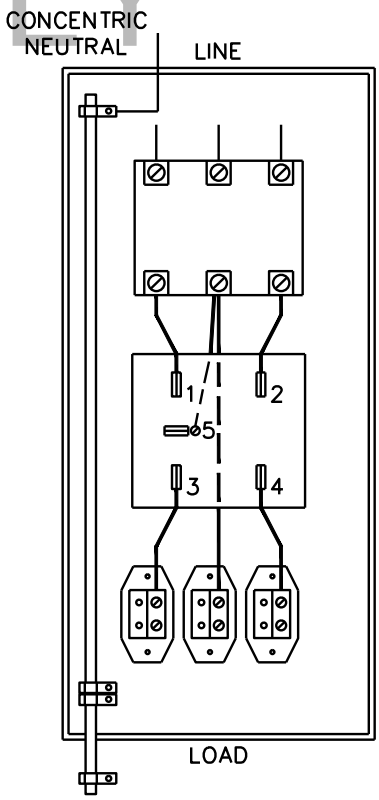

F100 OR F200

SCALE: N.T.S. ALL DIMENSIONS ARE IN MILLIMETRES UNLESS OTHERWISE INDICATED

SaskPower – DISTRIBUTION STANDARDS			
APPROVAL M.ERETH	DESIGN CHK. A.UHREN	DRN. A.GATZKE CHKD.	OILFIELD SERVICE 3ø 480 V. 3 WIRE
		2015-04-22	
DATE OF ISSUE 2015/08/18		DRAWING NO. A-24-08	SHEET 3 of 3 REV. D

BILL OF MATERIAL

ITEM NO.	CODE NO.	QUANTITY	DESCRIPTION
1	1 13 14	1	BOLT – MACHINE 5/8"x14"
2	1 34 09	2	GUARD – CABLE – 2 1/2" X 8' PLASTIC
3	1 78 12	1	SCREW – LAG – 1/2" x 4 1/2"
4	1 93 27	1	WASHER – LOCK DOUBLE COIL 5/8"
5	1 93 30	1	WASHER – ROUND 9/16"
6	1 93 42	1	WASHER – SQUARE 2¼" x 2 ¼" x 13/16" HOLE
7	2 65 86	2	HYLUG – 3/0 AL
8	2 65 83	1	HYLUG – #2
9	2 83 04	1 m	WIRE – CU #4 STR
10	2 92 80	8 m	CABLE – SERVICE 2 – 3/0 AL
11	5 04 04	1	CABINET F200 LESS METERING SOCKET
11	5 04 06	1	CABINET F200 5 –JAW METERING SOCKET
12	5 08 50	1	CONNECTOR – WATERTIGHT 1 1/2"
13	5 12 06	2	CONNECTOR CU – 4C4
14	5 12 08	1	CONNECTOR CU – 2C4
15	5 14 18	1	LEAD STRAP
16	7 69 64	0.22	SCREW – WOOD #14 – 2 1/2" ROBERTSON (100/BOX)

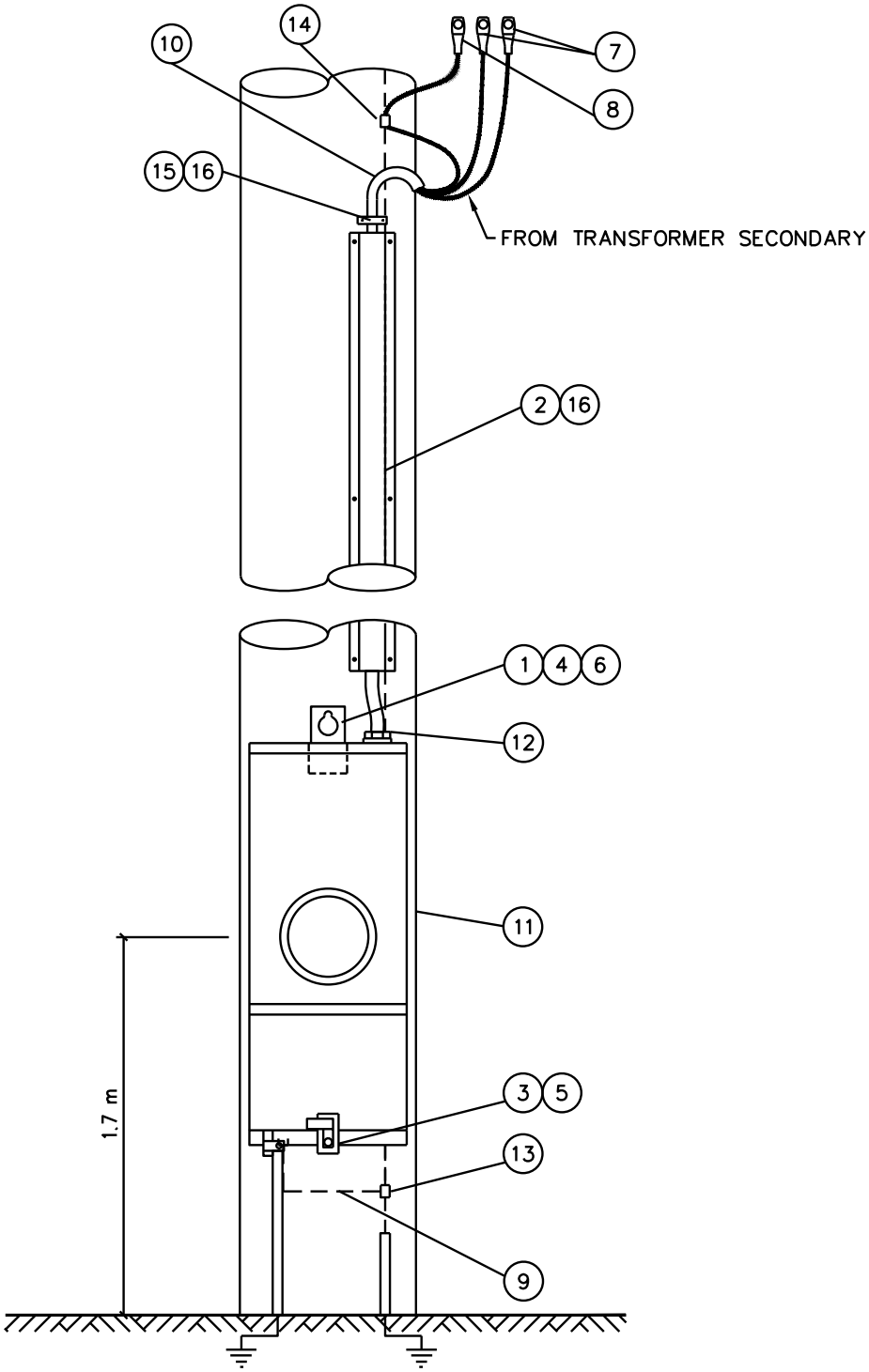

NOTE:

1. FOR 120/240 V AND 240/480 V FOLLOW INSTRUCTIONS ON A-24-09 SHEET 3 FOR MODIFYING METER JAWS FOR 1ø CONNECTION.
2. IF NOT INSTALLED ON A TRANSFORMER STRUCTURE, INSTALL A GROUND GRID TYPE 'C'. CONNECT DIRECTLY TO GROUND LUG OF CABINET.
3. REFER TO SECTION A-33 FOR GROUND GRID TYPE 'C'.

SCALE: N.T.S. ALL DIMENSIONS ARE IN MILLIMETRES UNLESS OTHERWISE INDICATED

SaskPower – DISTRIBUTION STANDARDS			
APPROVAL M.ERETH	DESIGN CHK. A.UHREN	DRN. A.GATZKE CHKD. 2015-03-24	OILFIELD SERVICIES FOR 1ø 120/240 V & 240/480 V UNDERGROUND
DATE OF ISSUE 2015/08/18		DRAWING NO. A-24-09	SHEET 2 of 3 REV. H

FOR 240/480 V 1 Ø – 3W SERVICE
OR
120/240 V 1 Ø – 3W SERVICE

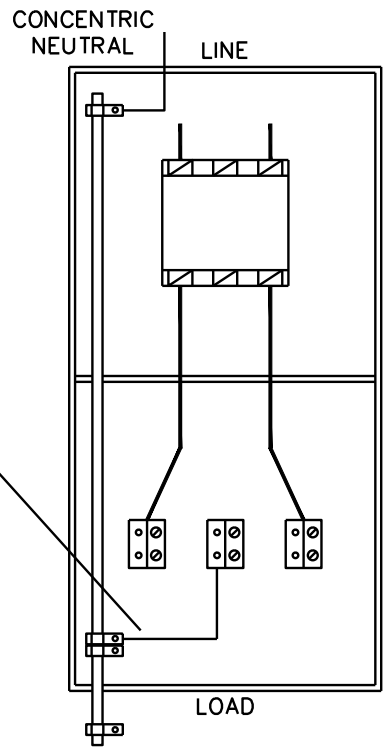

CONNECT CENTER TERMINAL NEUTRAL TO NEUTRAL BAR.

NOTE: UNIT PREWIRE FOR 3Ø – 3W 480V SERVICE RECONNECT AS INDICATED.

F200 (LMS)

FOR 240/480 V 1 Ø – 3W SERVICE
OR
120/240 V 1 Ø – 3W SERVICE

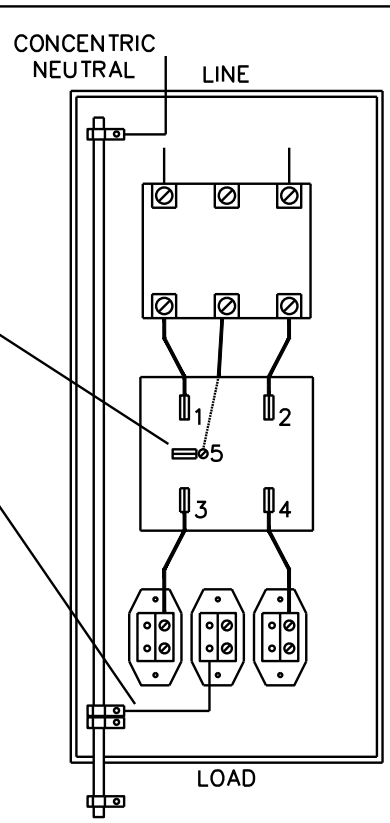

REMOVE 5th JAW & #10 JUMPER. CONNECT CENTER TERMINAL TO NEUTRAL BAR.

NOTE: UNIT PREWIRE FOR 3Ø – 3W 480V SERVICE RECONNECT AS INDICATED.

F200

SCALE: N.T.S. ALL DIMENSIONS ARE IN MILLIMETRES UNLESS OTHERWISE INDICATED

SaskPower – DISTRIBUTION STANDARDS			
APPROVAL M.ERETH	DESIGN CHK. A.UHREN	DRN. A.GATZKE CHKD. 2015-04-22	OILFIELD SERVICES FOR 1ø 120/240 V AND 240/480 V UNDERGROUND
DATE OF ISSUE 2015/08/18		DRAWING NO. A-24-09	SHEET 3 of 3 REV. E

BILL OF MATERIAL

ITEM NO.	CODE NO.	QUANTITY A	QUANTITY B	DESCRIPTION
1	1 12 14	1	1	BOLT – MACHINE – 1/2" x 14"
2	1 13 14	1	1	BOLT – MACHINE – 5/8" x 14"
3	1 34 09	2	2	GUARD – CABLE – 2 1/2" X 8' PLASTIC
4	1 78 38	2	2	LAG – SCREW 3/8" x 4"
5	1 85 02	1	1	STAPLE – MOULDING
6	1 93 26	1	1	WASHER - LOCK - 1/2"- DOUBLE COIL SPRING
7	1 93 27	1	1	WASHER - LOCK - 5/8"- DOUBLE COIL SPRING
8	1 93 30	1	1	WASHER – ROUND – 9/16" HOLE
9	1 93 42	1	1	WASHER – SQUARE – 2 ¼" x 2 ¼" x 13/16" HOLE
10	2 65 84	2	2	HYLUG – 1/0 AL
11	2 65 94	1	1	HYLUG – A#4
12	2 83 04	1 m	1 m	WIRE – CU #4/7 STR
13	2 92 87	8 m	8 m	CABLE – SERVICE ENTRANCE 2 x 1/0 AL
14	5 03 25	1	1	FARM POWER CENTER – WITH STANDBY SWITCH
15	5 08 02	1	1	CONNECTOR – NON-WATERTIGHT 1/2"
16	5 08 48	1	1	CONNECTOR – WATERTIGHT 1 1/2"
17	5 12 06	2	2	CONNECTOR CU – 4C4
18	7 69 64	0.20	0.20	SCREW – WOOD #14 – 2 1/2″ ROBERTSON (100/BOX)
19	7 95 21	1	--	BREAKER – CIRCUIT 100 AMP 2-POLE
19	7 95 22	--	1	BREAKER – CIRCUIT 200 AMP 2-POLE

NOTE:

1. **COLUMN A IS FOR 100 AMP SERVICE**
   COLUMN B IS FOR 200 AMP SERVICE

*Sask***Power** - DISTRIBUTION STANDARDS

DRN.	DESIGN CHK.	APPROVAL	1Ø FARM CABINET UP TO 200 AMPS COMPLETE WITH STANDBY
CHKD.			
DATE	DATE	DATE	

DATE OF ISSUE **2009/06/29**	DRAWING NO: **A-24-10**	**SHEET 1 OF 2**	REV. **G**

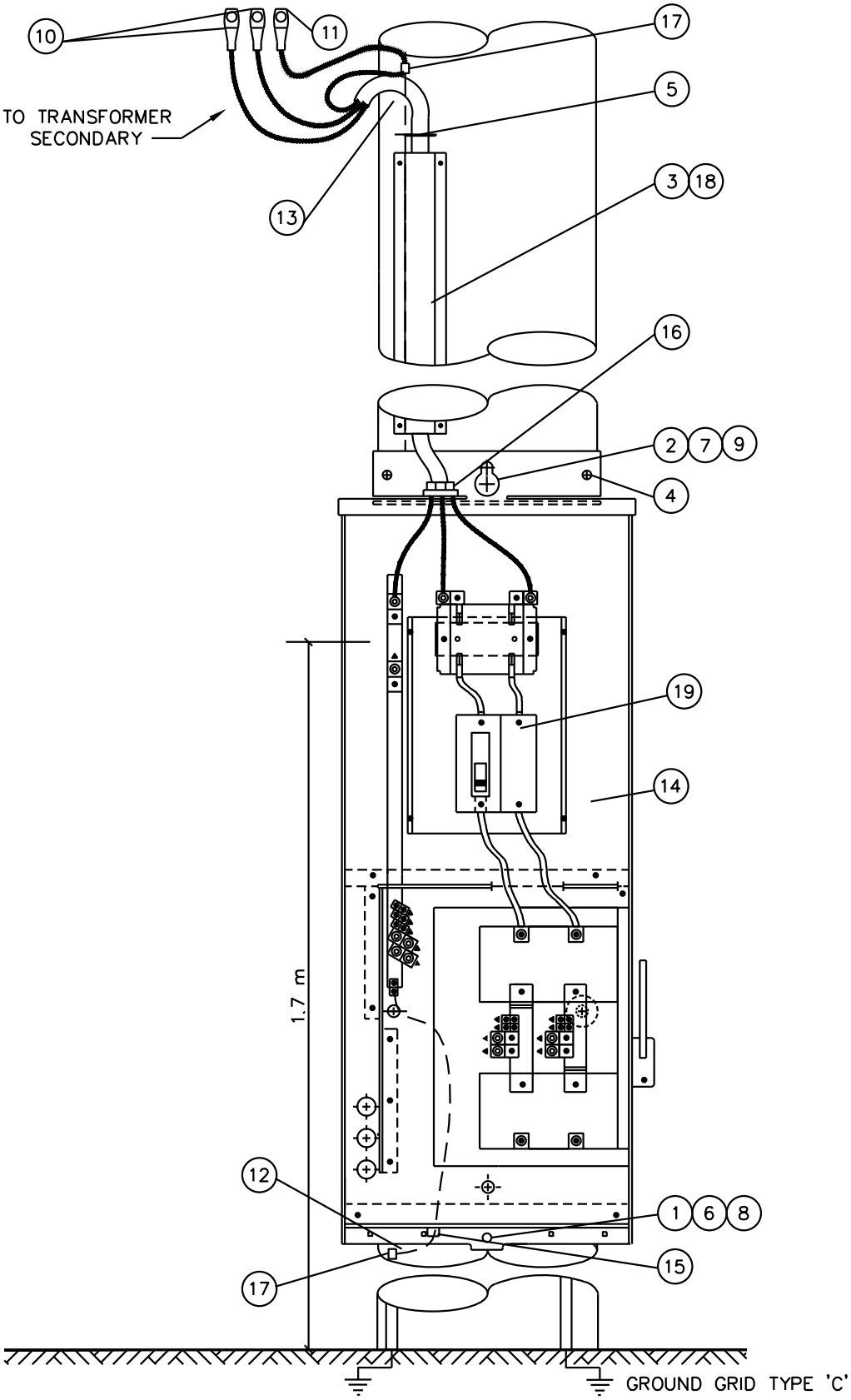

NOTE:
1. REFER TO A-08 SECTION FOR TRANSFORMER AND MATERIAL.
2. REFER TO SECTION A-33 FOR GROUNDING DETAILS.

SCALE: N.T.S. ALL DIMENSIONS ARE IN MILLIMETRES UNLESS OTHERWISE INDICATED

SaskPower – DISTRIBUTION STANDARDS			
APPROVAL L.MOEN	DESIGN CHK. A.UHREN	DRN. Y.HAO CHKD. A.UHREN	1ø FARM CABINET UP TO 200 AMPS COMPLETE WITH STANDBY
		2016-08-08	
DATE OF ISSUE 2016/11/08		DRAWING NO. A-24-10 SHEET 2 of 2	REV. H

BILL OF MATERIAL

ITEM NO.	CODE NO.	QUANTITY A	QUANTITY B	DESCRIPTION
1	1 12 14	1	1	BOLT – MACHINE – 1/2" x 14"
2	1 13 14	1	1	BOLT – MACHINE – 5/8" x 14"
3	1 34 09	2	2	GUARD – CABLE – 2 1/2" X 8' PLASTIC
4	1 78 38	2	2	LAG – SCREW 3/8" x 4"
5	1 85 02	1	1	STAPLE – MOULDING
6	1 93 26	1	1	WASHER - LOCK - 1/2"- DOUBLE COIL SPRING
7	1 93 27	1	1	WASHER - LOCK - 5/8"- DOUBLE COIL SPRING
8	1 93 30	1	1	WASHER – ROUND – 9/16" HOLE
9	1 93 42	1	1	WASHER – SQUARE – 2 ¼"x 2 ¼"x 13/16" HOLE
10	2 65 84	2	2	HYLUG – 1/0 AL
11	2 65 94	1	1	HYLUG – #4
12	2 83 04	1 m	1 m	WIRE – CU #4/7 STR
13	2 92 87	9 m	9 m	CABLE – SERVICE ENTRANCE 2 x 1/0 AL
14	5 03 30	1	--	METER BOX COMPLETE 100 AMP 2-POLE BREAKER
14	5 03 32	--	1	METER BOX COMPLETE 200 AMP 2-POLE BREAKER
15	5 08 48	1	1	CONNECTOR – WATERTIGHT 1 1/2"
16	5 12 06	2	2	CONNECTOR CU – 4C4
17	7 69 64	0.20	0.20	SCREW – WOOD #14 – 2 1/2" ROBERTSON (100/BOX)

NOTE:

1. **COLUMN A IS FOR 100 AMP SERVICE**
   COLUMN B IS FOR 200 AMP SERVICE

*Sask**Power*** - DISTRIBUTION STANDARDS

DRN.	DESIGN CHK.	APPROVAL	**1∅ FARM CABINET UP TO 200 AMPS**
CHKD.			
DATE	DATE	DATE	

DATE OF ISSUE **2009/06/29** | DRAWING NO: **A-24-11** | **SHEET 1 OF 2** | REV. **I**

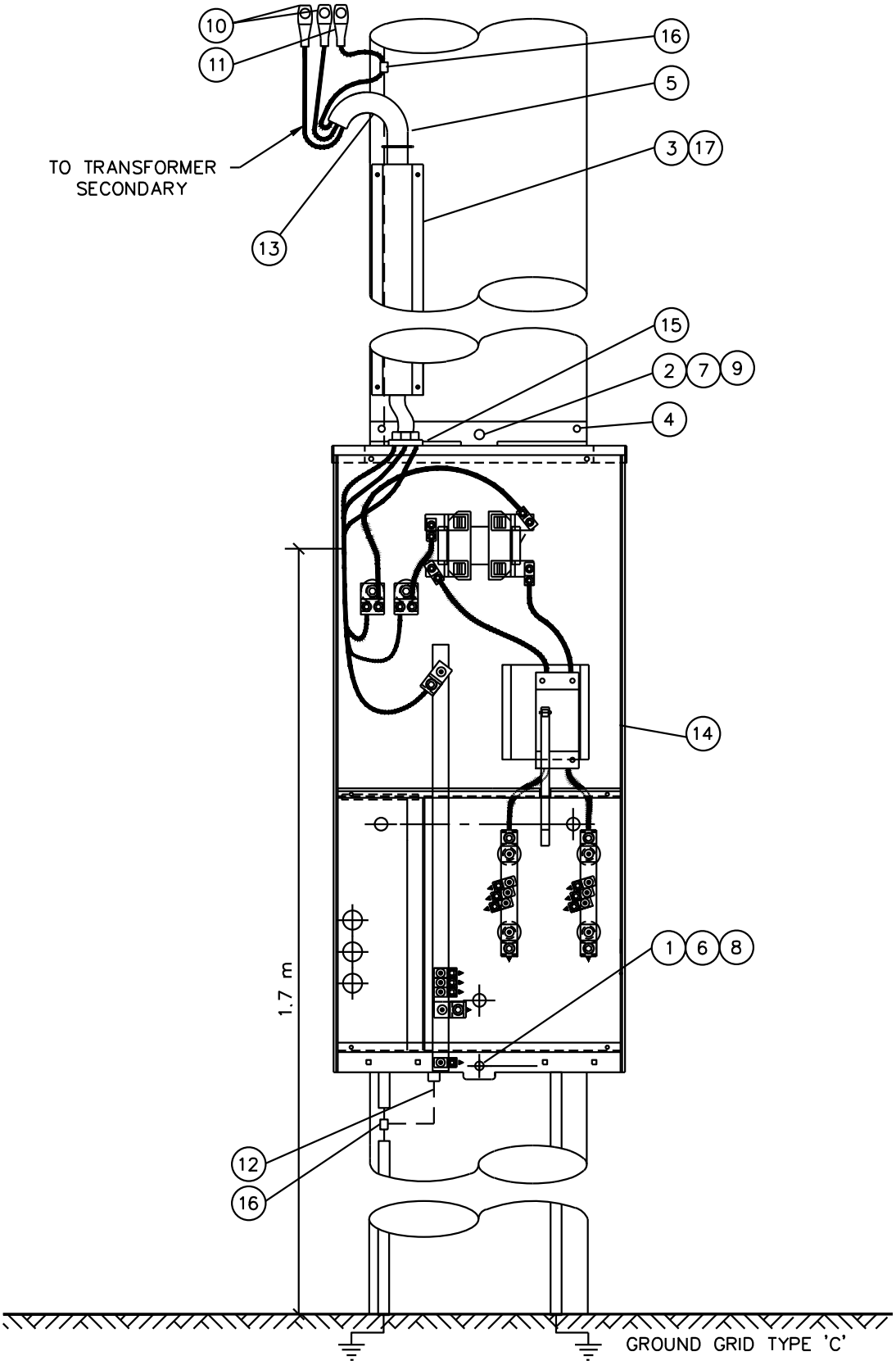

NOTE:

1. REFER TO A-08 SECTION FOR TRANSFORMER AND MATERIAL.
2. REFER TO SECTION A-33 FOR GROUNDING DETAILS.

SCALE: N.T.S. ALL DIMENSIONS ARE IN MILLIMETRES UNLESS OTHERWISE INDICATED

SaskPower – DISTRIBUTION STANDARDS			
APPROVAL L.MOEN	DESIGN CHK. A.UHREN	DRN. Y.HAO CHKD. A.UHREN	1ø FARM CABINET UP TO 200 AMP
		2016-08-08	
DATE OF ISSUE 2016/11/08		DRAWING NO. A-24-11	SHEET 2 of 2 REV. J

BILL OF MATERIAL

ITEM NO.	CODE NO.	QUANTITY	DESCRIPTION
1	1 11 12	1	BOLT-EYE - 5/8" x 12"
2	1 78 12	1	SCREW-LAG - 1/2" x 4 1/2"
3	1 85 02	20	STAPLE-MOULDING
4	1 93 42	1	WASHER-SQUARE - 2 1/4" x 2 1/4" x 13/16" HOLE
5	2 83 04	1 m	WIRE-CU #4/7 STR
6	2 92 87	16m	CABLE-SERVICE 2 x 1/0 AL 600 V
7	5 03 05	1	METER BOX COMPLETE WITH 100/150 AMP BREAKER
8	5 12 06	3	CONNECTOR-COMPRESSION #4 TO #4
9	7 69 64	2	SCREW-WOOD #14 x 2 1/2"
10	5 08 05	1	CONNECTOR - NON-WATER TIGHT
11	5 08 47	1	CONNECTOR - WATERTIGHT

SPC/AUTODRAFT

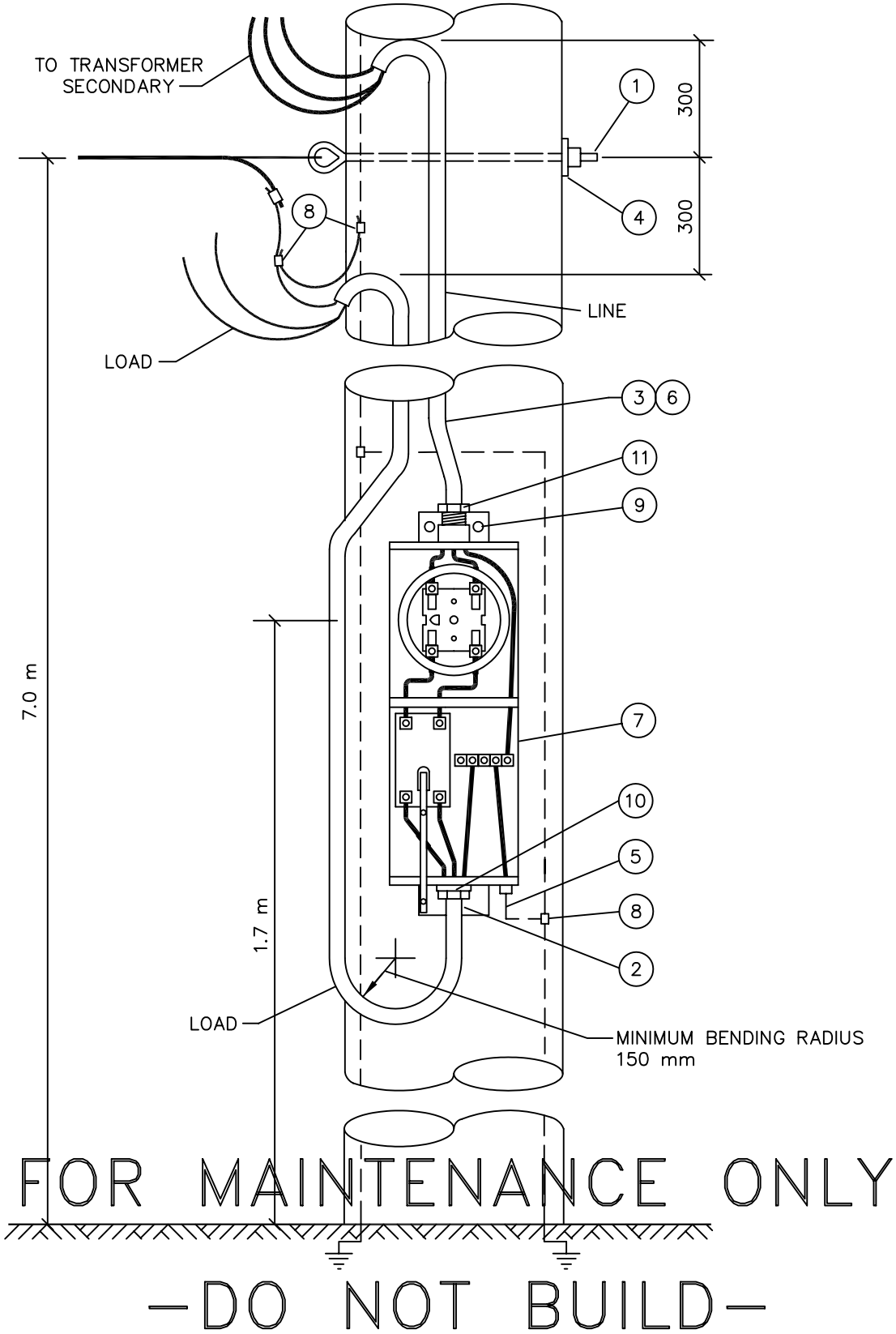

FOR MAINTENANCE ONLY

—DO NOT BUILD—

NOTE:
1. REFER TO SECTION A–08 FOR TRANSFORMER AND MATERIAL.
2. LOOP LOAD CABLE AT EXIT OF PANEL DOWN 600mm.
3. REFER TO B–24–XX FOR UNDERGROUND SERVICES.

SCALE: N.T.S. ALL DIMENSIONS ARE IN MILLIMETRES UNLESS OTHERWISE INDICATED

SaskPower – DISTRIBUTION STANDARDS

DRN. D.F.K.	DESIGN CHK.	SAFETY APP.	APPROVAL	1Ø FARM CABINET
CHKD.				
DATE 92–06–26	DATE	DATE	DATE	
DATE OF ISSUE 90–04–02		DRAWING NO. A–24–12	SHEET 2 of 2	REV. C

BILL OF MATERIAL

ITEM NO.	CODE NO.	QUANTITY	DESCRIPTION
1	1-08-38	2	BOLT-CARRIAGE - 3/8" x 4 1/2"
2	1-09-18	1	BOLT-DOUBLE ARMING - 5/8" x 18"
3	1-09-20	4	BOLT-DOUBLE ARMING - 5/8" x 20"
4	1-12-08	4	BOLT-MACHINE - 1/2" x 8"
5	1-13-12	2	BOLT-MACHINE - 5/8" x 12"
6	1-14-14	2	BOLT-MACHINE - 3/4" x 14"
7	1-19-32	2	BRACE-X-ARM - 32"
8	1-21-31	2	PLATE-ADAPTER
9	1-29-10	2	CROSSARM - 10' x 5" x 4"
10	1-53-13	2	PIN-FEMALE
11	1-78-12	1	SCREW-LAG - 1/2" x 4 1/2"
12	1-85-01	0.5 kg	STAPLE-FENCE
13	1-85-02	20	STAPLE-MOULDING
14	1-93-25	8	WASHER-LOCK DOUBLE COIL - 3/8"
15	1-93-27	5	WASHER-LOCK DOUBLE COIL - 5/8"
16	1-93-42	17	WASHER-SQUARE - 2 1/4" x 2 1/4" x 13/16" HOLE
17	2-XX-XX	6	CLAMP-DEADEND (SIZE TO SUIT)
18	2-20-23	2	INSULATOR (PIN TYPE)
19	2-27-00	9.5 m	MOULDING-WOOD
20	2-29-25	3	DEADEND-POLYMER TONGUE-TO-TONGUE
21	2-65-XX	15	HYLUG (SIZE TO SUIT)
22	2-71-77	3	SWITCH - OCR BYPASS - 27 Kv
23	2-XX-XX	35 m	WIRE-COPPER (SIZE TO SUIT)
24	2-83-04	12 m	WIRE-CU #4/7 STR
25	2-97-50	2	UNI-TIE
26	5-09-XX	4	CONNECTOR-COMPRESSION
			(SIZE TO SUIT - REFER TO SECTION A-36)
28	5-12-06	4	CONNECTOR-COMPRESSION - #4 TO #4
29	6-02-21	3	ARRESTERS – 21 kV SURGE SERIES GAPPED MOV
			* NOTE: SUPPLIED BY METERING SERVICES
30	7-69-62	3	SCREW-WOOD #10 - 1 1/2"

*Sask**Power*** - DISTRIBUTION STANDARDS

DRN.	DESIGN CHK.	APPROVAL	**25 kV POLE-MOUNTED 3Ø - 4W WYE PRIMARY METER INSTALLATION**
CHKD.			
DATE	DATE	DATE	

DATE OF ISSUE **93-10-12**	DRAWING NO: **A-24-15** **SHEET 1 of 4**	REV. **0**

AUTO DRAFT

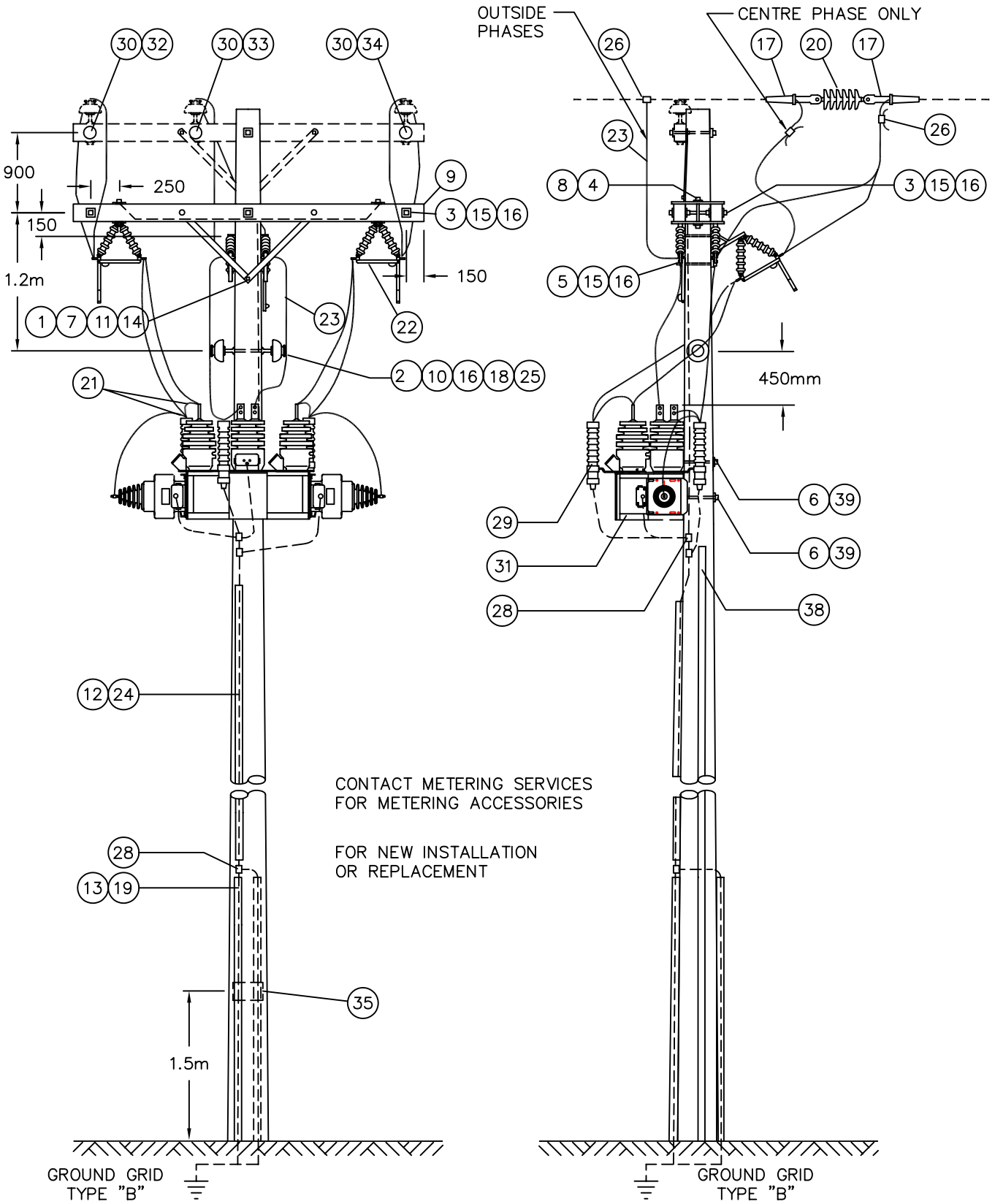

NOTE: PHASE MARKERS ON SAME SIDE OF CROSSARM AS METERING UNIT.

SCALE: N.T.S. ALL DIMENSIONS ARE IN MILLIMETRES UNLESS OTHERWISE INDICATED

SaskPower – DISTRIBUTION STANDARDS

DRN. D.F.K.	DESIGN CHK.	APPROVAL	25KV POLE MOUNTED 3ø–4W WYE PRIMARY METER INSTALLATION
CHKD.			
DATE	DATE	DATE	

DATE OF ISSUE	DRAWING NO. A–24–15	SHEET 2 of 4	REV. 0

BILL OF MATERIAL

ITEM NO.	CODE NO.	QUANTITY	DESCRIPTION
31	**METERING SERVICES**	**1**	**CLUSTER BRACKET COMPLETE WITH METERING TRANSFORMERS**
32	**05-116-368**	**1**	**PHASE MARKER – RED**
33	**05-116-366**	**1**	**PHASE MARKER – YELLOW**
34	**05-116-362**	**1**	**PHASE MARKER – BLUE**
35	**05-640-000**	**1**	**SIGN – DANGER**
36	**SUPPLIED**	**3**	**CURRENT TRANSFORMER**
37	**SUPPLIED**	**2**	**VOLTAGE TRANSFORMER**
38	**METERING SERVICES**		**CONDUIT – 2" STANDARD CONDUIT EQUIPMENT**
39	**1-93-28**	**2**	**WASHER – LOCK DOUBLE COIL – ¾"**

NOTE:

1. **ITEM #17, DEADEND CLAMP CONNECTOR. REFER TO SECTION A-36.**
2. **FROM RISER TO CURRENT TRANSFORMER – VIA ARRESTOR; KEEP CONDUCTOR CONTINUOUS. USE A TAP (AMPACT) TO CONNECT TO ARRESTOR, IF NEEDED.**
3. **ON CENTER PHASE RISERS, ENDURE A 10" CLEARANCE TO GROUNDING WIRE ON POLE.**
4. **SECONDARY WIRING, METER, AND METER BOX SUPPLIED BY METERING SERVICES.**

AUTO ✱ DRAFT

SINGLE LINE DIAGRAM

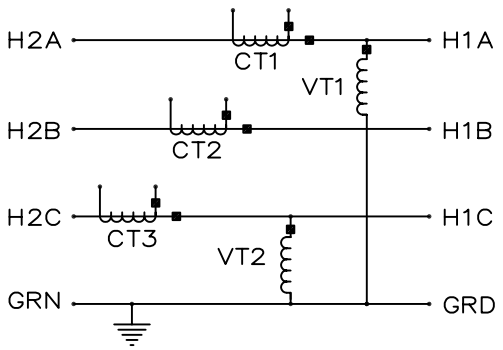

PHASE SEQUENCING

TOP VIEW

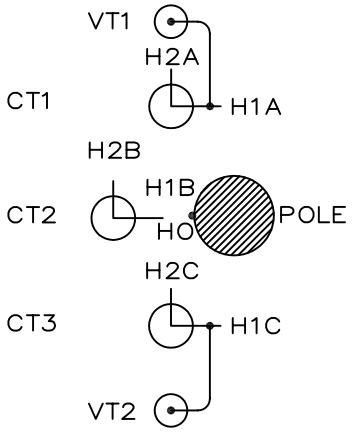

	OR	OR
R	B	Y
Y	R	B
B	Y	R

RISER CONNECTION DIAGRAM

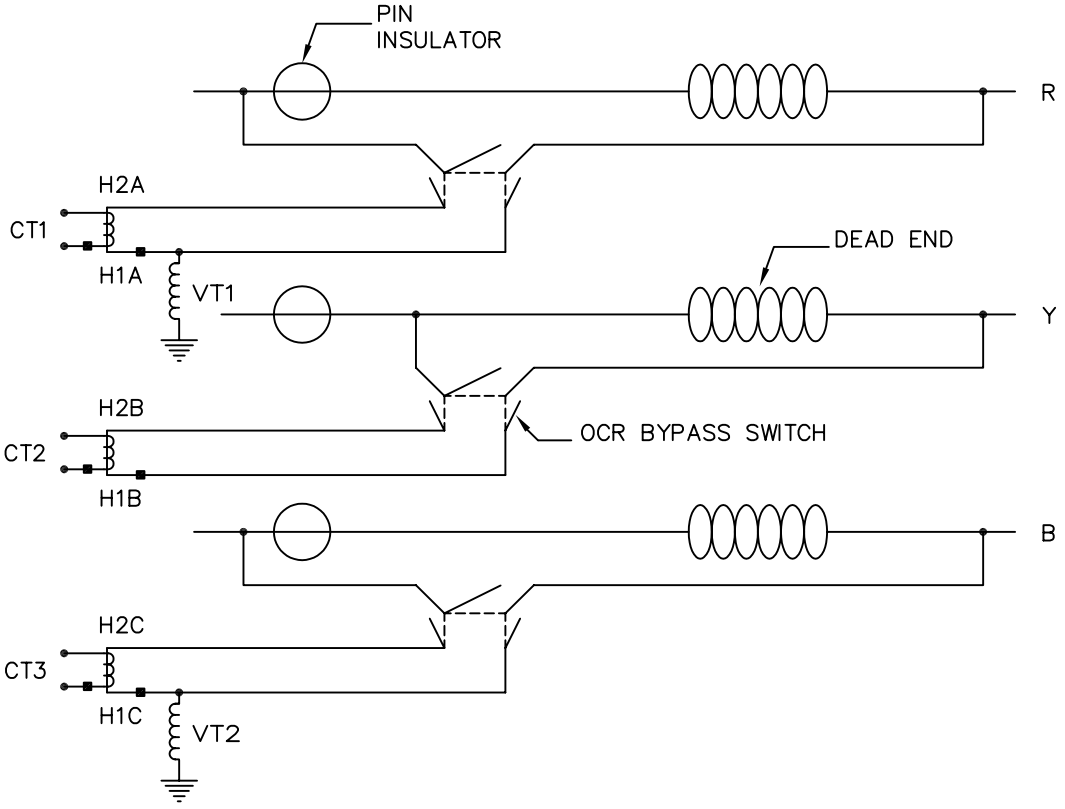

NOTES:

1. ARRESTORS ARE NOT SHOWN FOR SCHEMATICS.
2. REFER TO REVENUE METERING CONNECTION DIAGRAM CD–192 (3ø–4W WYE)

SCALE: N.T.S. ALL DIMENSIONS ARE IN MILLIMETRES UNLESS OTHERWISE INDICATED

SaskPower – DISTRIBUTION STANDARDS

DRN. S.D.	DESIGN CHK.	APPROVAL	25KV POLE MOUNTED 3ø–4W WYE PRIMARY METER INSTALLATION
CHKD.			
DATE 93–05–10	DATE	DATE	

DATE OF ISSUE 93–05–25	DRAWING NO. A–24–15	SHEET 4 of 4	REV. 0

BILL OF MATERIAL

ITEM NO.	CODE NO.	QUANTITY	DESCRIPTION
1	1-08-38	2	BOLT-CARRIAGE - 3/8" x 4 1/2"
2	1-19-32	2	BRACE-X-ARM - 32"
3	1-78-12	1	SCREW-LAG - 1/2" x 4 1/2"
4	1-93-25	4	WASHER-LOCK DOUBLE COIL - 3/8"
5	1-29-10	2	CROSSARM - 10' x 5" x 4"
6	1-09-20	4	BOLT-DOUBLE ARMING - 5/8" x 20"
7	1-93-27	6	WASHER-LOCK DOUBLE COIL - 5/8"
8	1-93-42	15	WASHER-SQUARE - 2 1/4" x 2 1/4" - 13/16" HOLE
9	1-12-08	4	BOLT-MACHINE - 1/2" x 8"
10	1-21-31	2	PLATE-ADAPTER
11	2-71-77	3	SWITCH-OCR BYPASS - 27 kV
12	2-20-23	1	INSULATOR-PIN TYPE
13	1-14-14	2	BOLT-MACHINE - 3/4" x 14"
14	2-XX-XX	4	CLAMP-DEADEND (SIZE TO SUIT)
15	2-29-25	2	DEADEND-POLYMER TONGUE-TO-TONGUE
16	METERING SERVICES	1	CLUSTER BRACKET - 3Ø - 3W - DELTA INCLUDING - 2 CTs - 2 VTs (6-02-21) - 3 LIGHTING ARRESTORS - 21 kV MOV
17	2-83-04	12 m	WIRE-CU #4/7 STR
18	5-12-06	4	CONNECTOR-COMPRESSION - #4 TO #4
19	1-85-01	0.5 kg	STAPLE-FENCE
20	1-85-02	20	STAPLE MOULDING
21	2-27-00	9.5 m	MOULDING-WOOD
22	2-XX-XX	35 m	WIRE-COPPER (SIZE TO SUIT)
23	5-09-XX	5	CONNECTOR-COMPRESSION (SIZE TO SUIT - REFER TO SECTION A-36)
24	2-65-XX	12	HYLUG (SIZE TO SUIT)
25	2-65-94	2	CONNECTOR-HYLUG #4
26	METERING SERVICES		CONDUIT - 2" - SUPPLIED
27	7-69-62	3	SCREW-WOOD #10 - 1 1/2"
28	05-116-362	1	BLUE-PHASE MARKER

*Sask**Power*** - DISTRIBUTION STANDARDS

DRN.	DESIGN CHK.	APPROVAL	25 kV POLE-MOUNTED 3Ø - 3W DELTA PRIMARY METER INSTALLATION
CHKD.			
DATE	DATE	DATE	

DATE OF ISSUE **93-10-12** | DRAWING NO: **A-24-16** | **SHEET 1 OF 4** | REV. **0**

SPC/AUTODRAFT

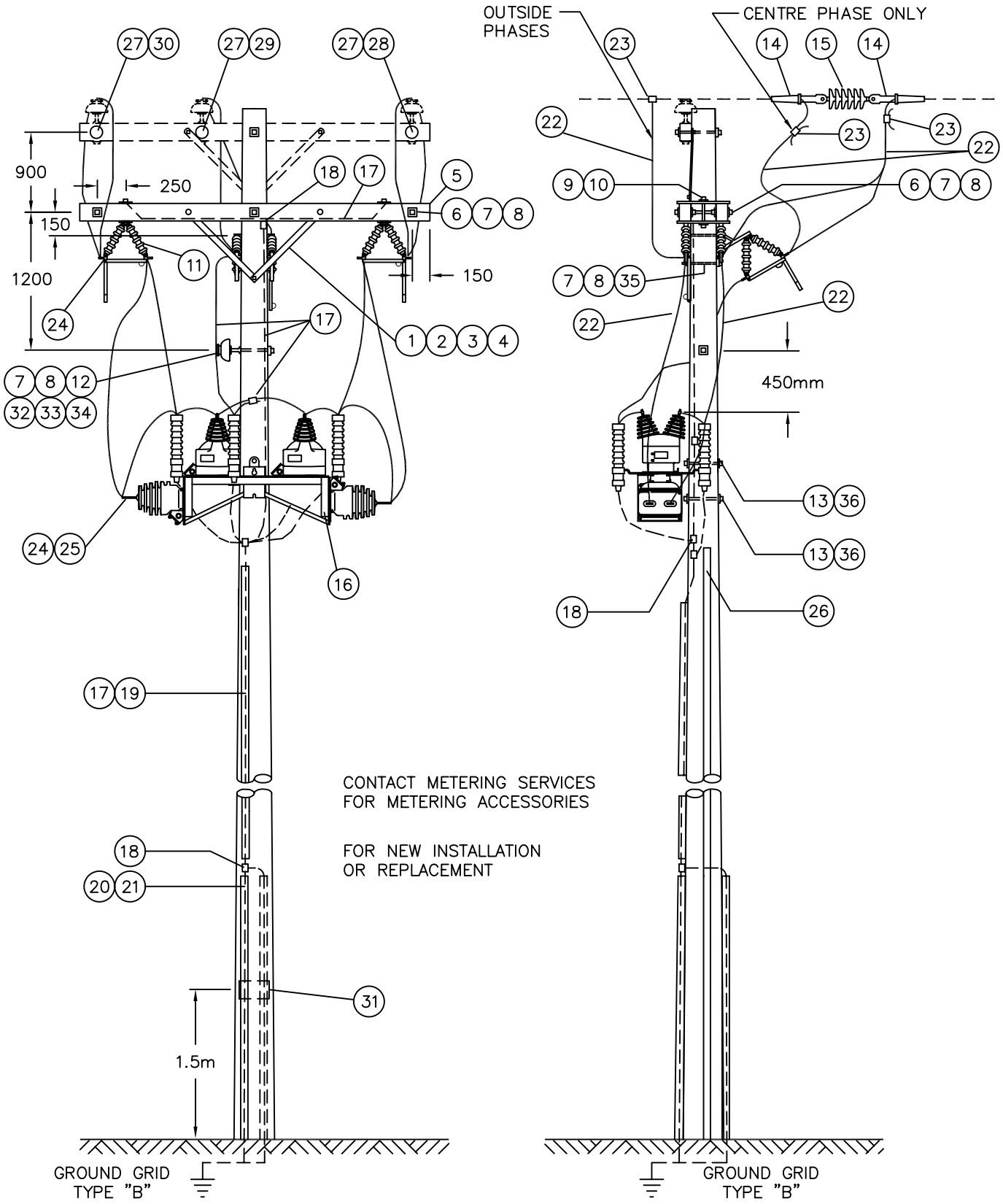

NOTE: PHASE MARKERS ON SAME SIDE OF CROSSARM AS METERING UNIT.

SCALE: N.T.S. ALL DIMENSIONS ARE IN MILLIMETRES UNLESS OTHERWISE INDICATED

SaskPower – DISTRIBUTION STANDARDS

DRN. M.T.S.	DESIGN CHK.	SAFETY APP.	APPROVAL	25KV POLE MOUNTED 3ø–3W DELTA PRIMARY METER INSTALLATION
CHKD.				
DATE 93-03-17	DATE	DATE	DATE	
DATE OF ISSUE		DRAWING NO. A–24–16	SHEET 2 of 4	REV. 0

BILL OF MATERIAL

ITEM NO.	CODE NO.	QUANTITY	DESCRIPTION
29	**05-116-366**	**1**	**PHASE MARKER – YELLOW**
30	**05-116-368**	**1**	**PHASE MARKER – RED**
31	**05-640-000**	**1**	**SIGN – DANGER**
32	**1-13-10**	**1**	**BOLT – MACHINE – 5/8" x 10"**
33	**1-53-13**	**1**	**PIN – FEMALE**
34	**2-97-50**	**1**	**UNI-TIE**
35	**1-13-12**	**2**	**BOLT – MACHINE – 5/8 x 12"**
36	**1-93-28**	**2**	**WASHER – LOCK DOUBLE COIL – ¾"**

NOTE:

1. **ITEM #14, DEADEND CLAMP CONNECTOR. REFER TO SECTION A-36.**
2. **RISER TO CURRENT TRANSFORMER VIA ARRESTOR - KEEP CONDUCTOR CONTINUOUS. USE A TAP (AMPACT) TO CONNECT TO ARRESTOR, IF NEEDED.**
3. **SECONDARY WIRING, METER, AND METER BOX SUPPLIED BY METERING SERVICES.**

*Sask**Power*** - DISTRIBUTION STANDARDS

DRN.	DESIGN CHK.	APPROVAL	**25 kV POLE-MOUNTED 3Ø - 3W DELTA PRIMARY METER INSTALLATION**
CHKD.			
DATE	DATE	DATE	

DATE OF ISSUE **93-10-12**	DRAWING NO: **A-24-16**	**SHEET 3 OF 4**	REV. **0**

SPC/AUTODRAFT

SINGLE LINE DIAGRAM

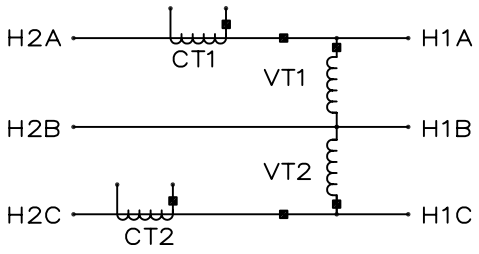

PHASE SEQUENCING

TOP VIEW

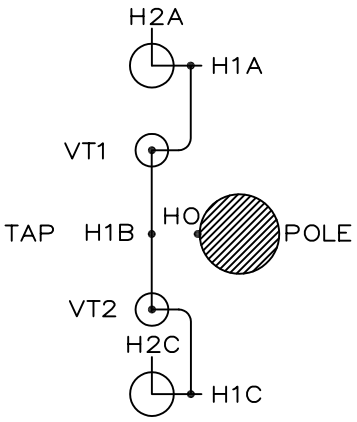

	OR	OR
R	B	Y
Y	R	B
B	Y	R

RISER CONNECTION DIAGRAM

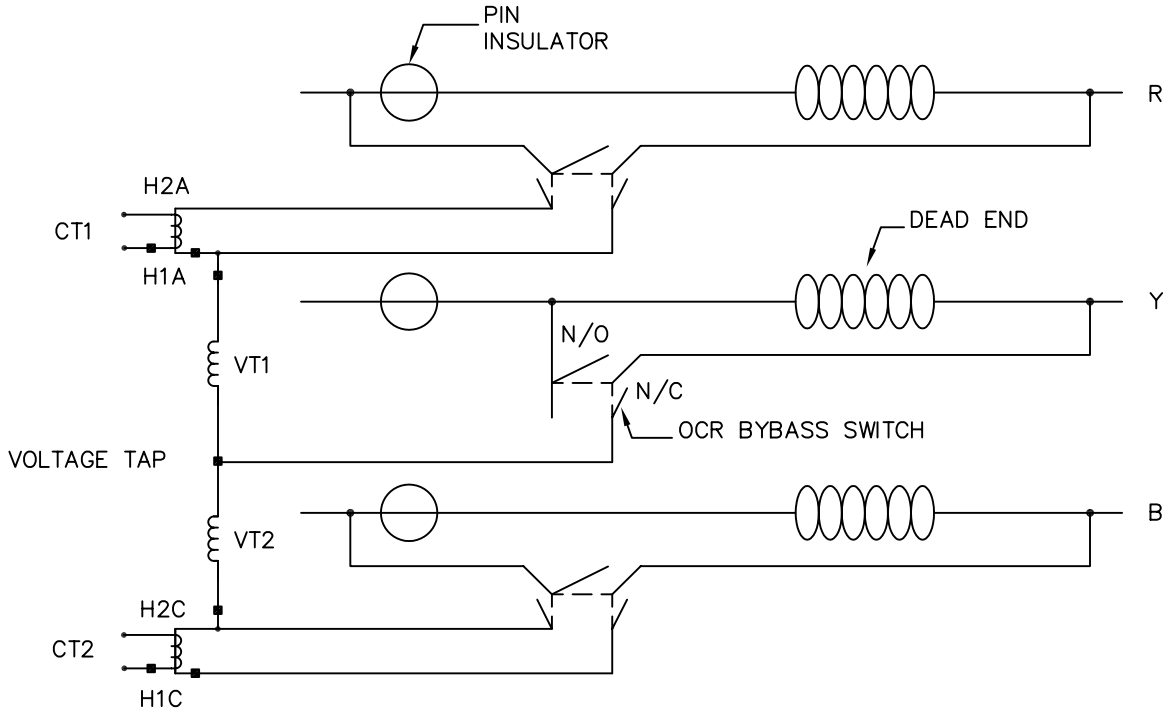

NOTES:

1. ARRESTORS ARE NOT SHOWN FOR SCHEMATICS.
2. REFER TO REVENUE METERING CONNECTION DIAGRAM CD–146 (3ø–3W DELTA)

SCALE: N.T.S. ALL DIMENSIONS ARE IN MILLIMETRES UNLESS OTHERWISE INDICATED

SaskPower – DISTRIBUTION STANDARDS

DRN. S.D.	DESIGN CHK.	SAFETY APP.	APPROVAL	25KV POLE MOUNTED 3ø–3W DELTA PRIMARY METER INSTALLATION
CHKD.				
DATE 93-05-10	DATE	DATE	DATE	
DATE OF ISSUE 93–05–25		DRAWING NO. A–24–16	SHEET 4 of 4	REV. 0

BILL OF MATERIAL

ITEM NO.	CODE NO.	QUANTITY	DESCRIPTION
1	**5 04 16**	**2**	**POWER DIST.BLOCKS-DOUBLE-#6 TO 350MCM**
2	**05 646 585**	**3**	**DECAL - CAUTION - DO NOT GROUND X0**

*Sask**Power*** - DISTRIBUTION STANDARDS			
APPROVAL **L. MOEN**	DESIGN CHK **A. UHREN**	DRN. **ARU** CHKD. **2016-12-22**	**F-200 METER BOX MODIFICATION FOR CUSTOMER NEUTRAL GROUNDING RESISTOR**
DATE OF ISSUE: 2017/05/03		DRAWING NO: **A-24-17**	**SHEET 1 OF 2** REV. **0**

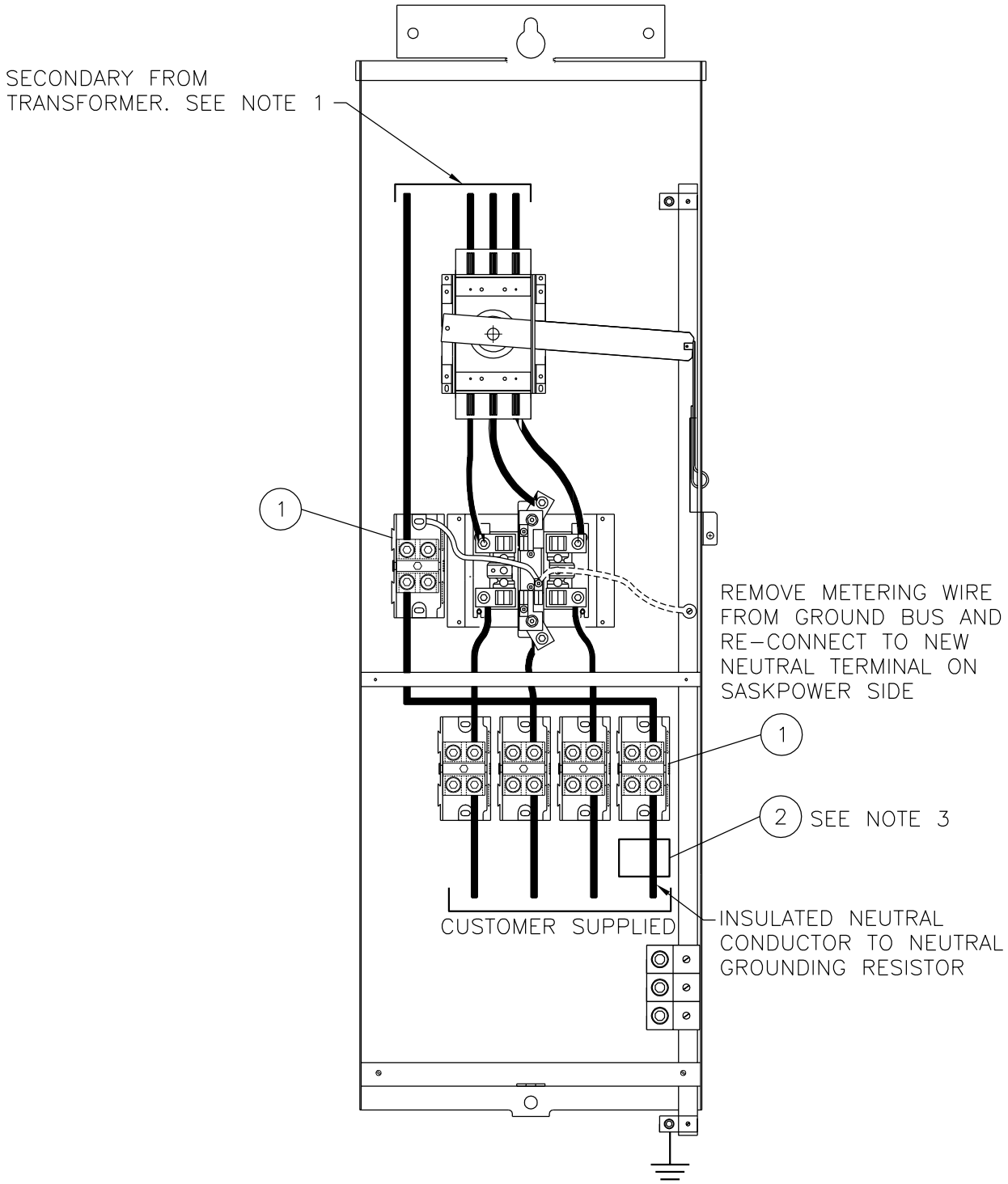

NOTES:

1. AN UNGROUNDED, INSULATED NEUTRAL CONDUCTOR MUST BE USED TO CONNECT TRANSFORMER X0 TO METER BOX NEUTRAL. TRANSFORMER X0 TERMINAL SHALL NOT BE GROUNDED OR CONNECTED WITH H0 TERMINAL (H0 IS STILL GROUNDED).
2. MATERIAL FOR METER BOX INSTALL NOT INCLUDED. THIS DRAWING IS INTENDED TO COMPLIMENT DRAWING A-24-07 OR B-24-71.
3. INSTALL ONE NGR DECAL BELOW NEW NEUTRAL TERMINAL BLOCK IN METER BOX, ONE ON THE OUTSIDE OF METER BOX, AND ONE AT TRANSFORMER X0 TERMINAL.

SaskPower – DISTRIBUTION STANDARDS			
APPROVAL L.MOEN	DESIGN CHK. A.UHREN	DRN. Y.HAO CHKD. A.UHREN 2017-01-05	F-200 METER BOX MODIFICATION FOR CUSTOMER NEUTRAL GROUNDING RESISTOR
DATE OF ISSUE 2017/05/03		DRAWING NO. A-24-17	SHEET 2 of 2 REV. –